INSTALLATION INSTRUCTIONS AND OWNER'S MANUAL

Boulevard
DIRECT-VENT LINEAR FIREPLACES

INSTALLER: Leave this manual with the appliance.
CONSUMER: Retain this manual for future reference.

⚠ WARNING

FIRE OR EXPLOSION HAZARD
Failure to follow safety warnings exactly could result in serious injury, death or property damage.

- **Do not store or use gasoline or other flammable vapors and liquids in the vicinity of this or any other appliance.**
- **WHAT TO DO IF YOU SMELL GAS**
  - **Do not try to light any appliance.**
  - **Do not touch any electrical switch; do not use any phone in your building.**
  - **Leave the building immediately.**
  - **Immediately call your gas supplier from a neighbor's phone. Follow the gas supplier's instructions.**
  - **If you cannot reach your gas supplier, call the fire department.**
- **Installation and service must be performed by a qualified installer, service agency or the gas supplier.**

⚠ WARNING

If not installed, operated and maintained in accordance with the manufacturer's instructions, this product could expose you to substances in fuel or from fuel combustion which can cause death or serious illness.

DIRECT VENT ZERO CLEARANCE GAS FIREPLACE HEATER MODEL SERIES:

MULTIFUNCTION REMOTE (MF)
DVLL60BP90N-1
DVLL60BP90P-1

DESIGN CERTIFIED

GAS-FIRED
C UL US
LISTED

UL FILE NO. MH30033

This appliance may be installed in an aftermarket, permanently located, manufactured home (USA only) or mobile home, where not prohibited by local codes.

This appliance is only for use with the type of gas indicated on the rating plate.

This appliance is not convertible for use with other gases, unless a certified kit is used.

fire-parts.com

⚠ WARNING

HOT GLASS WILL CAUSE BURNS.
DO NOT TOUCH GLASS UNTIL COOLED.
NEVER ALLOW CHILDREN TO TOUCH GLASS.

A barrier designed to reduce the risk of burns from the hot viewing glass is provided with this appliance and shall be installed for the protection of children and other at-risk individuals.

Note: Barrier required, may be sold separately.

NATIONAL FIREPLACE INSTITUTE®
NFI
CERTIFIED
www.nficertified.org

We suggest that our gas hearth products be installed and serviced by professionals who are certified in the U.S. by the National Fireplace Institute® (NFI) as NFI Gas Specialists.

BEFORE YOU START

Sample Warnings and Definitions:

⚠ DANGER
Indicates a hazardous situation which, if not avoided, will result in death or serious injury.

⚠ WARNING
Indicates a hazardous situation which, if not avoided, could result in death or serious injury.

⚠ CAUTION
Indicates a hazardous situation which, if not avoided, could result in minor or moderate injury.

NOTICE: Addresses practices not related to personal injury.

1. Read the safety information on pages 57 - 58.
2. If located in the Commonwealth of Massachusetts, please note the special requirements on page 59.
3. Are you going to install a blower into the fireplace? See pages 8 - 10.
4. Where are you going to install the fireplace? See page 13.
5. Frame the opening. See page 20.
6. Install the gas lines. See pages 16 - 17.
7. Install the wiring. See pages 18 - 19.
8. Install the venting. See pages 24 - 33.
9. Install the fireplace. See pages 20 - 23.
10. Install the remote system. See pages 38 - 45.
11. Liner requirements. See page 36.
12. Install the glass media. See page 37.
13. Light the fireplace and troubleshoot. See pages 46 - 48.
14. Show the homeowner how to operate the fireplace.
15. Show the homeowner how to do the basic maintenance.

Unpacking the fireplace

1. Cut binding straps and shrink wrap.
2. Remove top board and corner posts.
3. Lift fireplace off of the pallet.
4. Remove non-combustible boards from pallet and set aside.
5. Verify that the fireplace and components have not been damaged during shipping.
6. Set fireplace in a location near to its final installation location.

Installation Considerations - Fireplace Installation Guidelines

When planning a fireplace installation, it's necessary to determine:

- Gas supply piping (right side entrance).
- Electrical supply requirements (120V, 60Hz, 1 Amp) (right side entrance)
- Proper opening size of framing required for installation of the fireplace.

In planning the installation for the fireplace, determine where the fireplace is to be installed and whether optional accessories are desired. Gas supply piping should also be planned at this time.

The fireplace can be mounted on any of these surfaces:

1. A flat hard combustible or non-combustible surface.
2. A raised platform of combustible or non-combustible material.

If the fireplace is installed directly on carpeting, tile or other combustible material other than wood flooring, it should be installed on a metal or wood panel extending the full width and depth of the fireplace.

The fireplace is designed to be installed in a zero-clearance enclosure. This means that combustible materials must be located at clearances specified or provided by standoffs or spacers attached to the fireplace.

Combustible materials can come in contact with the framing brackets provide.

fire-parts.com

HOMEOWNER REFERENCE INFORMATION

Record the following information about your fireplace.

Model: _____ Date purchased/installed: _____

Serial Number: _____ Location on fireplace: _____

Dealership: _____ Dealer Phone: _____

Notes: _____

_____

CARTON CONTENTS & HARDWARE PACK

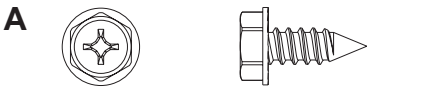

#10 X ½” HEX HEAD SCREW

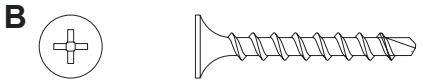

1” PHILLIPS SELF DRILLING SCREW

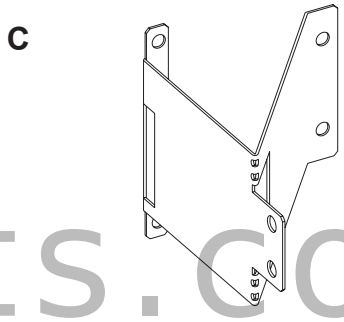

NAILING FLANGES

fire-parts.com

Items not shown to scale.

INDEX NUMBER	DESCRIPTION	QUANTITY SUPPLIED
1	Door Removal Tool (attached to fireplace)	1
2	Product Registration Card	1
3	AA Battery	4
4	AAA Battery	3
5	Wall Thimble Spacer (attached to fireplace)	1
6	Cover Plate, Battery Box	1
7	Remote	1
8	Junction Box Cover	1
9	Duplex Receptacle	1
10	Flue Restrictor Assembly	1
11	Battery Box	1
12	Grommet, 5/8 DIA	**1**
A	#10 x 1/2 Screw	22
B	#8 x 1 Self-Drilling Screw*	15
C	Nailing Flange	**4**

* For use in mounting non-combustible board to standoffs.

See Parts Lists on pages 50 for ordering replacement parts. Do not order batteries, bolts, screws, washers or nuts. They are standard hardware items and can be purchased at any local hardware store.

TABLE OF CONTENTS

SECTION	PAGE
INTRODUCTION	5
SPECIFICATIONS	6
ACCESSORIES	7
FBB20 BLOWER INSTALLATION	8 - 10
FIREPLACE DIMENSIONS	11
CLEARANCES	12
LOCATING FIREPLACE	13
VENT TERMINATION CLEARANCES	14 - 15
GAS SUPPLY	16 - 17
ELECTRICAL CONNECTIONS	18 - 19
INSTALLATION	20 - 23
VENT SYSTEM IDENTIFICATION	24
VENT SYSTEMS	24
VENTING FIREPLACE - TOP	25 - 27
TOP VENT - HORIZONTAL TERMINATION	28
TOP VENT - VERTICAL TERMINATION	29
VERTICAL TERMINATION	30 - 31
DVVK-5F FLEX VENT INSTRUCTIONS	32 - 33
FRAMING AND FINISHING	34 - 35
LINER INSTALLATION	36
GLASS PLACEMENT	37
MULTIFUNCTION REMOTE OPERATING INSTRUCTIONS	38 - 45
CONTROL SYSTEM TROUBLESHOOTING	46 - 47
LIGHTING INSTRUCTIONS	48
PARTS VIEW	50
PARTS LIST	51
COMPONENT WIRING DIAGRAM	52
MAINTENANCE AND SERVICE	53 - 56
IMPORTANT SAFETY INFORMATION	57 - 58
SAFETY INFORMATION FOR USERS OF LP GAS	59
REQUIREMENTS FOR MASSACHUSETTS	60
FIREPLACE SERVICE HISTORY	61
MASTER PARTS DISTRIBUTOR LIST	62
HOW TO ORDER REPAIR PARTS	62
WARRANTY	63

fireparts.com

INTRODUCTION

Instructions to Installer

1. Leave instruction manual with owner.
2. Have owner fill out and mail Product Registration Card supplied with the fireplace.
3. Show owner how to start and operate the fireplace.

This direct-vent gas fireplace heater is designed to operate with all combustion air being siphoned from the outside of the building and all exhaust gases expelled to the outside of the building. The information contained in this manual pertains to all models and gas control systems unless otherwise noted.

Appliance Certification

⚠ WARNING

This fireplace is not for use with solid fuels. Solid fuels could cause personal injury or property damage.

This fireplace is design certified in accordance with American National Standard/CSA Standard ANSI Z21.88/CSA 2.33 and by Underwriters Laboratories as a Direct Vent Gas Fireplace Heater and shall be installed according to these instructions.

Consult your local building code agency, prior to installation, to ensure compliance with local codes-including permits and inspections.

The fireplace, when installed, must be electrically grounded in accordance with local codes or, in absence of local codes, with the *National Electric Code ANSI/NFPA 70* or Canadian Electric code, CSA C22.1, if an external electrical source is utilized.

These models may be installed in a bedroom or bed-sitting room in the U.S.A. and Canada.

Qualified Installing Agency

Installation and replacement of gas piping, gas utilization equipment or accessories and repair and servicing of equipment shall be performed only by a qualified agency. The term “qualified agency” means any individual, firm, corporation or company which either in person or through a representative is engaged in and is responsible for (a) the installation or replacement of gas piping or (b) the connection, installation, repair or servicing of equipment, who is experienced in such work, familiar with all precautions required and has complied with all the requirements of the authority having jurisdiction.

State of Massachusetts: The installation must be made by a licensed plumber or gas fitter in the Commonwealth of Massachusetts.

⚠ WARNING

ANY CHANGE TO THIS FIREPLACE OR ITS CONTROLS CAN BE DANGEROUS.
Improper installation or use of the fireplace can cause serious injury or death from fire, burns, explosions, or carbon monoxide poisoning.

The installation must conform with local codes or, in the absence of local codes, with the *National Fuel Gas Code ANSI Z223.1/ NFPA 54* Natural Gas and Propane Installation Code, or CSA B149.1 in Canada. *Available from the American National Standards Institute, Inc. 11 West 42nd St., New York, N.Y. 10036.*

Any alteration of the original design, installed other than as shown in these instructions or use with a type of gas not shown on the rating plate is the responsibility of the person and company making the change.

Important

All correspondence should refer to complete Model Number, Serial Number and type of gas.

High Altitude

When installing this fireplace at an elevation above 2000 feet (in the United States) it may be necessary to decrease the input rating by changing the existing burner orifice to a smaller size. Generally, input should be reduced 4 percent for each 1000 feet above sea level. However, if the heating value of the gas has been reduced, this general rule may not apply. Check with Empire Comfort Systems for proper orifice size identification.

Canadian High Altitude

Altitude: 0-4500 feet (0-1370 m)

When installing this fireplace at an elevation above 4500 feet (in Canada), check with Empire Comfort Systems for assistance in determining the proper orifice for location.

fire-parts.com

Preparation

This direct vent gas fireplace and its components are tested and safe when installed in accordance with this Installation Manual. Report to your dealer any parts damaged in shipment, specifically check glass condition. Do not install fireplace with damaged, incomplete, or substitute parts. Read all instructions before starting installation and follow these instructions carefully during installation to insure maximum benefit and safety. Failure to follow them will void your warranty and may present a fire hazard.

The warranty will be voided by, and the warranter disclaims any responsibility for the following actions:

- Installation of any damaged fireplace or vent system component.
- Modification of the fireplace or direct vent system.
- Installation other than as instructed by Empire Comfort Systems Inc.
- Improper positioning of the glass door, or decorative accessories including logs, rocks, crushed glass or other approved media.
- Installation and/or use of any component part not manufactured or approved by manufacturer.

SPECIFICATIONS

DVLL60BP90	NAT	LP
Input BTU/Hr Maximum	46,000	42,500
Input BTU/Hr Minimum	31,000	32,500
KWH (Maximum)	13.34	12.33
KWH (Minimum)	9.00	9.43
Orifice	#29 (P280)	#48 (P300)
Air Shutter Opening	1/16in	Fully Open
Height without standoff	36-5/16in	36-5/16in
Width	73in	73in
Depth	18-5/8in	18-5/8in
Gas Inlet Shutoff Valve (pipe)	1/2in NPT	1/2in NPT
Vent Size	5 x 8	5 x 8

NOTE: Air shutter settings are factory minimum settings. Some venting configurations may require minor air shutter adjustments for optimum performance.

GAS SUPPLY PRESSURES (dimensions in inches water column - w.c.)			
GAS TYPE	MAXIMUM	MINIMUM	MANIFOLD
NAT	14	4.5	3.5
LP	14	11	10

fire-parts.com

ACCESSORIES

The following accessory parts can be obtained from your Empire Comfort Systems dealer. Contact your Empire Dealer for more accessory options. If you need additional information beyond what your dealer can furnish, contact Empire Comfort Systems Inc., 918 Freeburg Ave., Belleville, Illinois 62220-2623.

Model Number	Description
DVP60LPZ*	Ridgeback Liner (bronze painted)
DVP60LKR*	Porcelain liner (black)
FBB20**	Blower Kit (dual)
35470	Conversion Kit - LP to Nat
35469	Conversion Kit - Nat to LP
DF60BL	Beveled Finishing Trim (Black) - Adjustable (1/2in to 1-1/2in finish materials)
DF60HP	Beveled Finishing Trim (Hammered Pewter) - Adjustable 1/2in to 1-1/2in (finish materials)
LS60THF	Rustic Contemporary Logs, Stones, and Metal Curls

*Note: The fireplace is shipped without a liner installed. However, a liner must be installed at the time of fireplace installation or prior to its operation.

**Note: If the optional blower kit is desired, installation into the fireplace through the rear access panel is easier, prior to placing the fireplace into the framed out location.

fire-parts.com

FBB20 BLOWER INSTALLATION

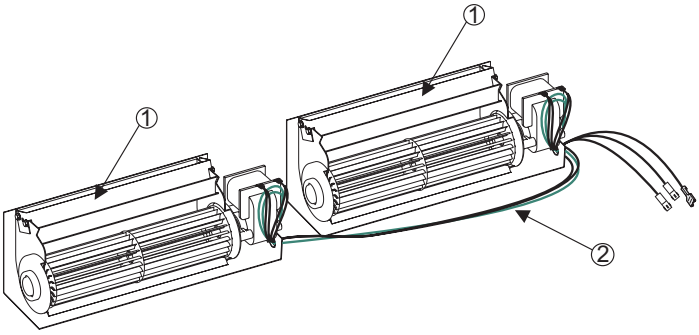

BLOWER ASSEMBLY PARTS LIST			
INDEX NO.	PART NO	DESCRIPTION	QTY
1	35727	Blower Assembly - Single	2
2	R11788	Wire Harness	1

TOOLS NEEDED:
5/16in Nut driver or screw gun

fireparts.com

⚠ CAUTION
Sharp edges. Use gloves when installing these blowers.

Installation - Prior to Setting Fireplace Into Final Position

1. Unpack the FBB20 Blower assembly.
2. Using a 5/16in hex drive, remove the 11 screws holding rear blower access cover plate, then lay the access plate on the floor. **See Figure 1.**

Figure 1

3. Use a rag to wipe the inside bottom of the fireplace (where the blowers will be placed) to remove dirt or construction dust.
4. Place blowers on the floor behind the fireplace. Position the blowers with the two black connecting wires and green ground wire towards the left hand side when facing the back of the fireplace. **See Figure 2.**

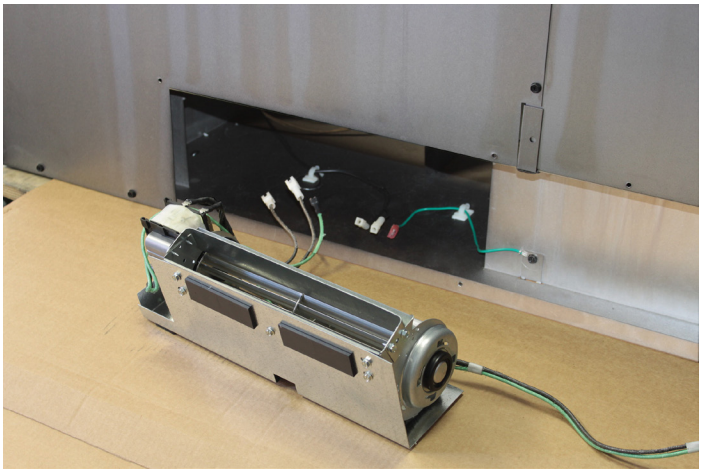

Figure 2

5. Locate the blower wire terminals inside the bottom of the fireplace and make the three connections as shown in Figure 3.

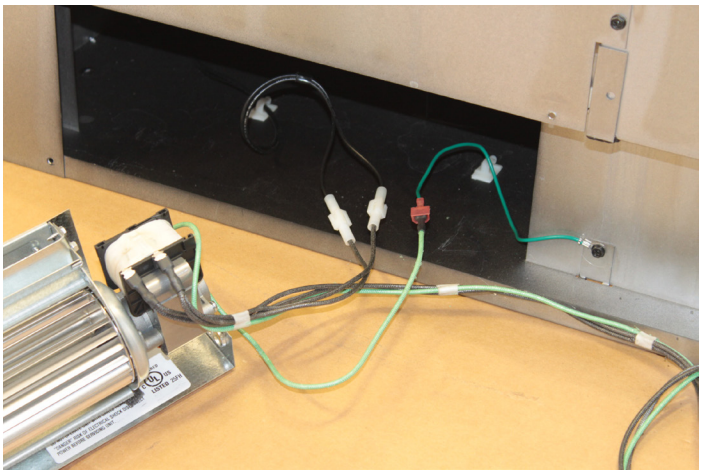

Figure 3

FBB20 BLOWER INSTALLATION

6. Begin installing the left blower assembly into the bottom of the fireplace. Once the blower is about half way in, secure wiring within the white plastic wire retention clips provided in the fireplace. **See Figure 4.**

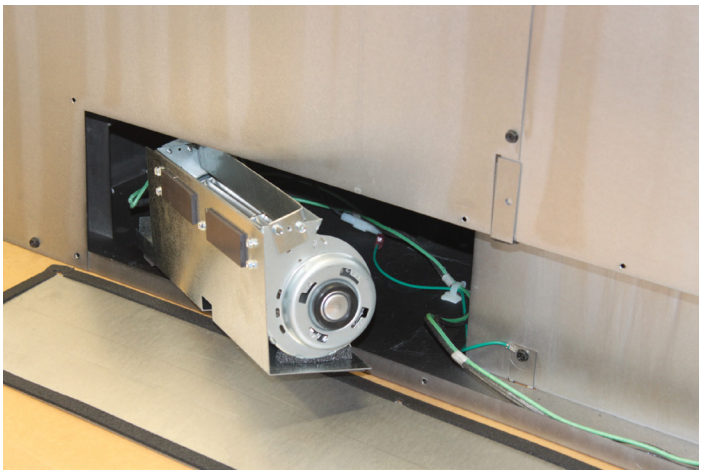

Figure 4

7. Finish installing the left blower so that the left edge of the blower base bracket is about even with the left edge of the access opening. Route the wiring away from the blower wheel. **See Figure 5.**

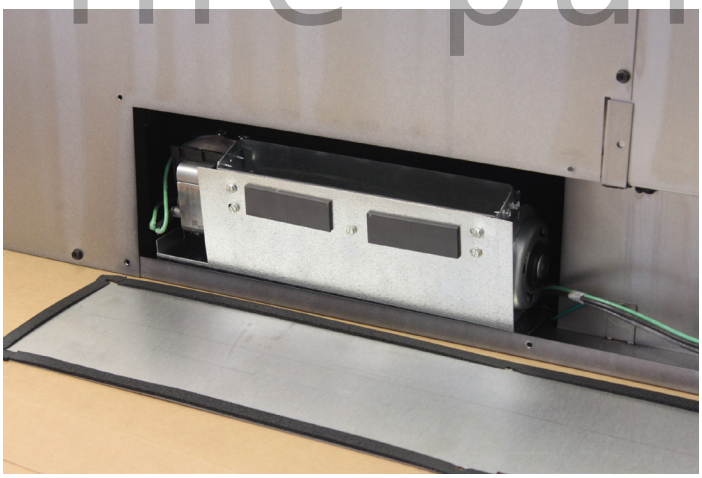

Figure 5

8. Next, install the right hand blower assembly towards the right side of the access opening. The right hand edge of the blower base bracket should be about even with the right edge of the access opening. Route wiring away from the blower wheel. **See Figure 6.**

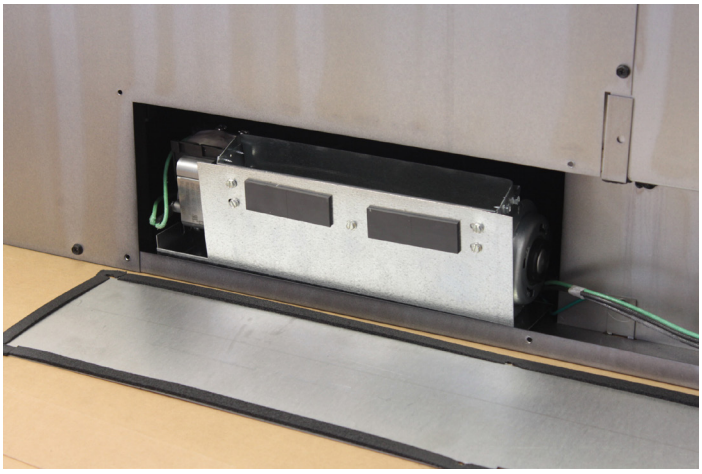

Figure 6

9. Snap the wire harness into the white plastic wire retention clip located at the center bottom of the fireplace. **See Figure 7.**

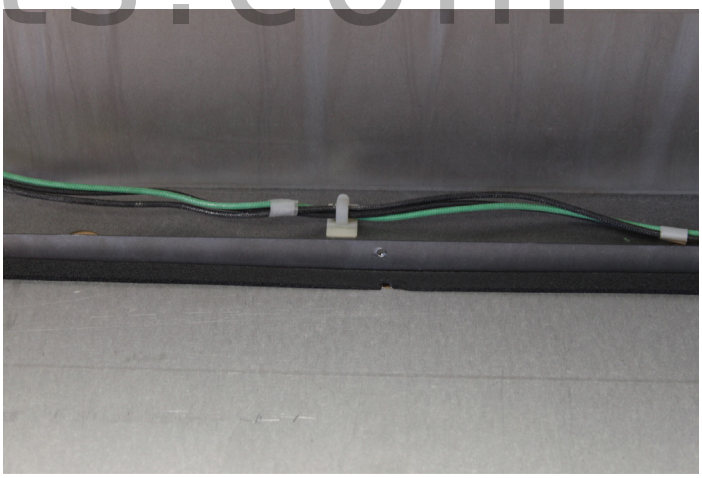

Figure 7

fire-parts.com

10. Make sure the blower base brackets are pulled rearward against the bottom flange of the fireplace. The magnets on the blower base bracket will keep the blowers in place. **See Figure 8.**

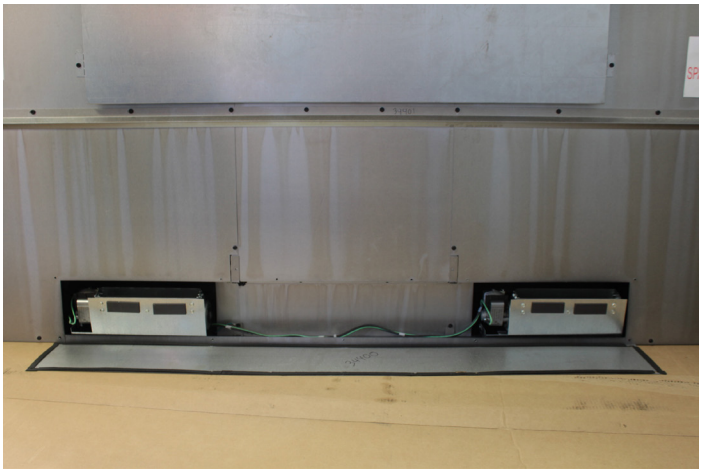

Figure 8

11. Re-attach the Blower Access Panel with the 11 screws removed in step 2. **See Figure 1.**
12. Blower installation is complete.

fire-parts.com

FIREPLACE DIMENSIONS

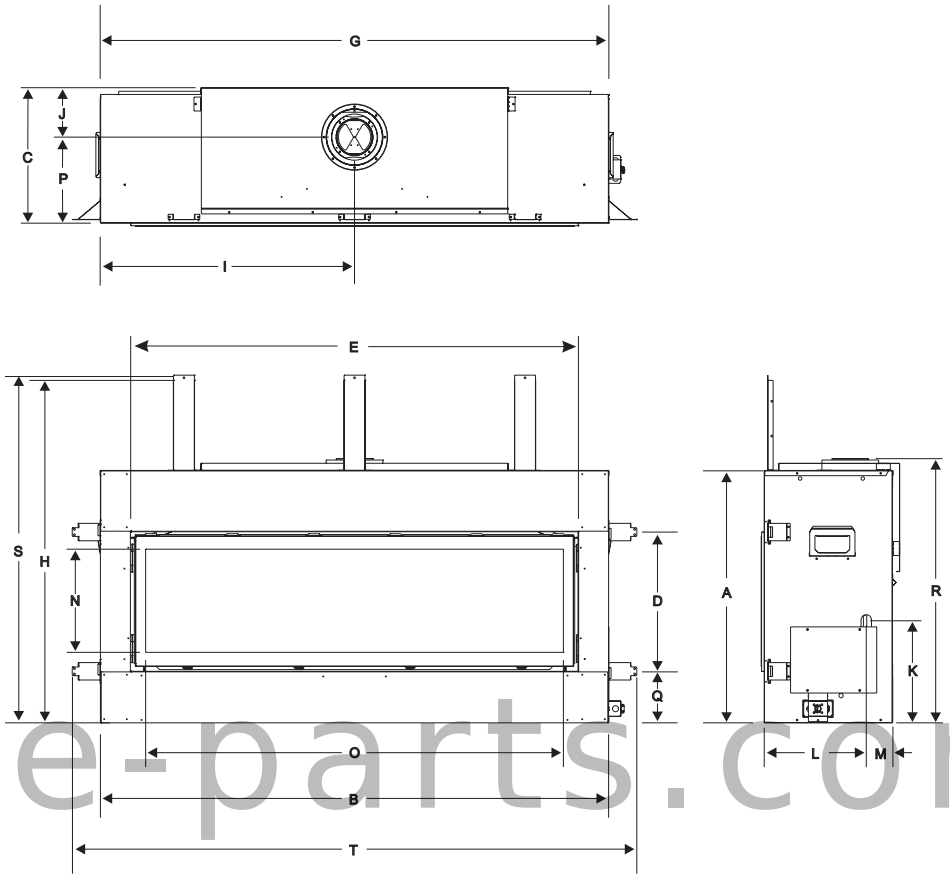

fire-parts.com

INDEX LETTER	DIMENSION DESCRIPTION	DVLL60BP90
		Dimensions in Inches
A	The maximum height of firebox face (excluding standoffs)	36-1/4
B	The maximum width of the firebox face (excluding nailing flanges)	73
C	The maximum depth of the firebox	19-1/2
D	The height of the firebox opening	20
E	The width of the firebox opening	64-1/4
F	The interior depth of the firebox (not shown)	13
G	The rear exterior width of the firebox	73
H	The height to the firebox standoffs	49-1/4
I	Width from the left side of the box to the centerline of vent	36-9/16
J	Depth from back of box to centerline of top vent	7-1/8
K	Height from the bottom of the box to the gas line opening	14-3/4
L	Depth from the front of the box to gas line opening	14-11/16
M	Depth from rear of box to gas line opening	3-3/4
N	Glass height	15
O	Glass width	60
P	Depth from front of box to centerline of vent	12-3/8
Q	Distance from floor to fireplace opening	7-3/8
R	Height from floor to vent collar	37-15/16
S	Overall height to header	49-3/8
T	Distance between framing bracket ends	81-1/16
U	Interior rear width of firebox (not shown)	57

CLEARANCES

Clearance to Combustibles	
Back	2in
Side	3in
Floor	0in
Top Stand-off Bracket	0in
Top Framing Edge	13in

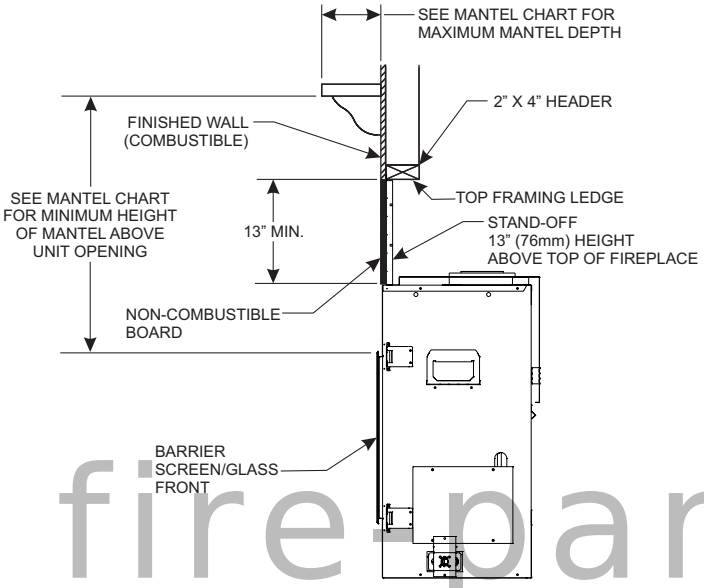

fire-parts.com

Note A: See Figure 12 for maximum mantel depth and minimum height above fireplace.

Figure 9

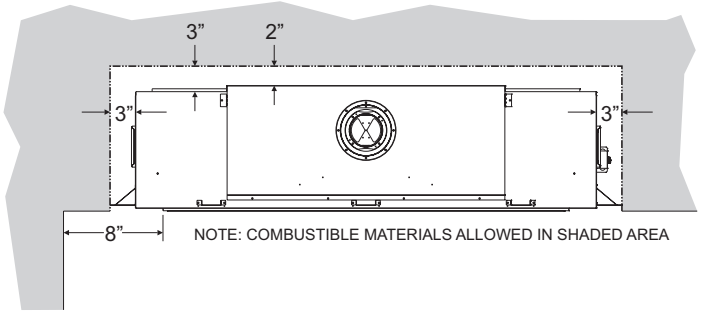

Figure 10

The minimum clearance from bottom of the fireplace opening to ceiling is 65in.
The minimum clearance from side of the fireplace opening to adjacent sidewall is 8in.

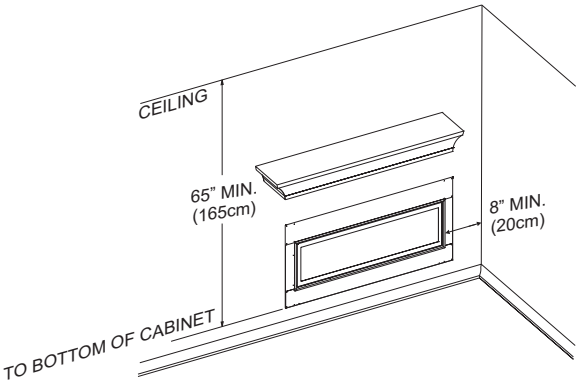

Figure 11

Mantel Chart

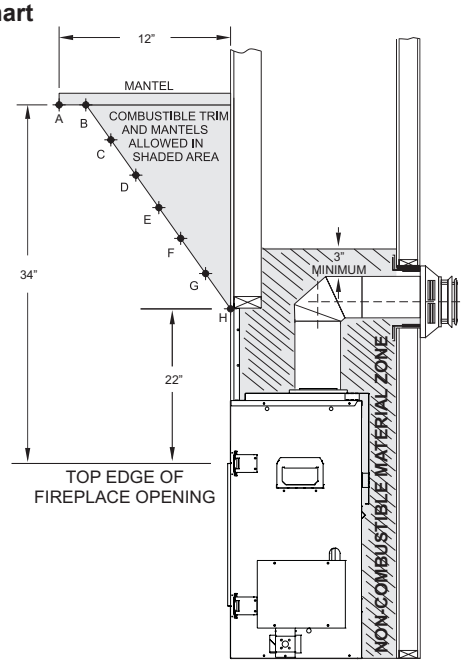

INDEX LETTER	DISTANCE FROM FIREPLACE OPENING (in inches)	DISTANCE FROM FINISHED WALL (in inches)
A	34	12
B	34	10
C	32	8-3/8
D	30	6-5/8
E	28	5
F	26	3-3/8
G	24	1-3/4
H	22	0

Figure 12

Television Considerations

Installing a television above a fireplace has become increasingly popular; however, the area above any fireplace gets hot and most TV manufacturers recommend against placing their products near a heat source.
If you install a television above this fireplace, Empire Comfort Systems accepts no responsibility for damage or injuries. Follow the television manufacturer's installation instructions, including any recommendations regarding proximity to heat sources.
If you have a TV above your fireplace, turn off the fireplace and let it cool completely before servicing or touching any buttons on the TV.

LOCATING FIREPLACE

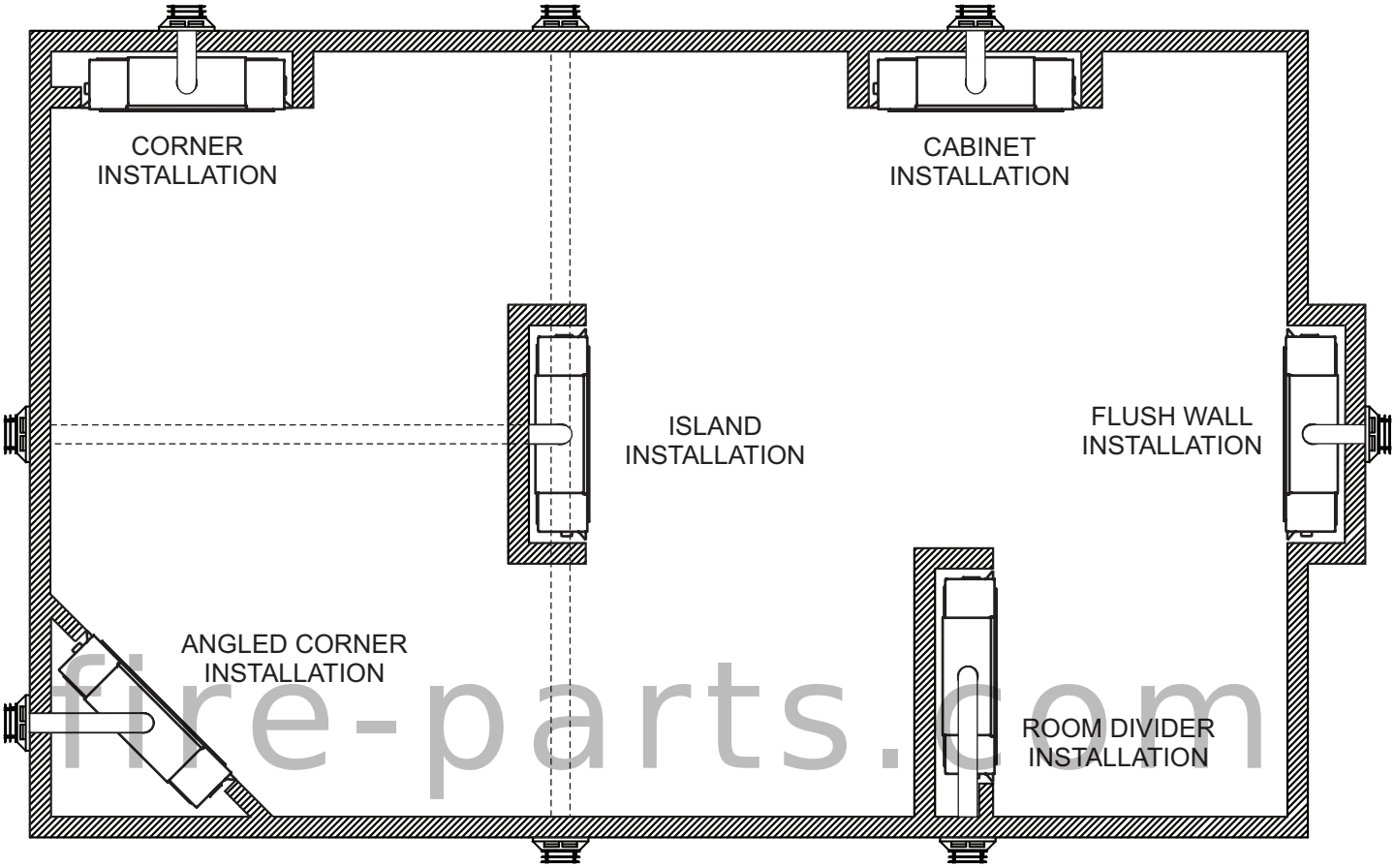

fire-parts.com

Note: Island and Room Divider installation is possible as long as the horizontal portion of the vent system does not exceed 20 feet with a minimum vertical run of 8 feet. See details in Venting Section.

Note: When installing this fireplace against an exterior wall, insulate to applicable insulation codes.

When you install your Direct Vent Fireplace in Room divider or Flat on wall corner positions, a minimum of 8 inches clearance must be maintained from the perpendicular wall and the front opening of the fireplace.

Figure 13

VENT TERMINATION CLEARANCES

Termination clearance for buildings with combustible and noncombustible exteriors.

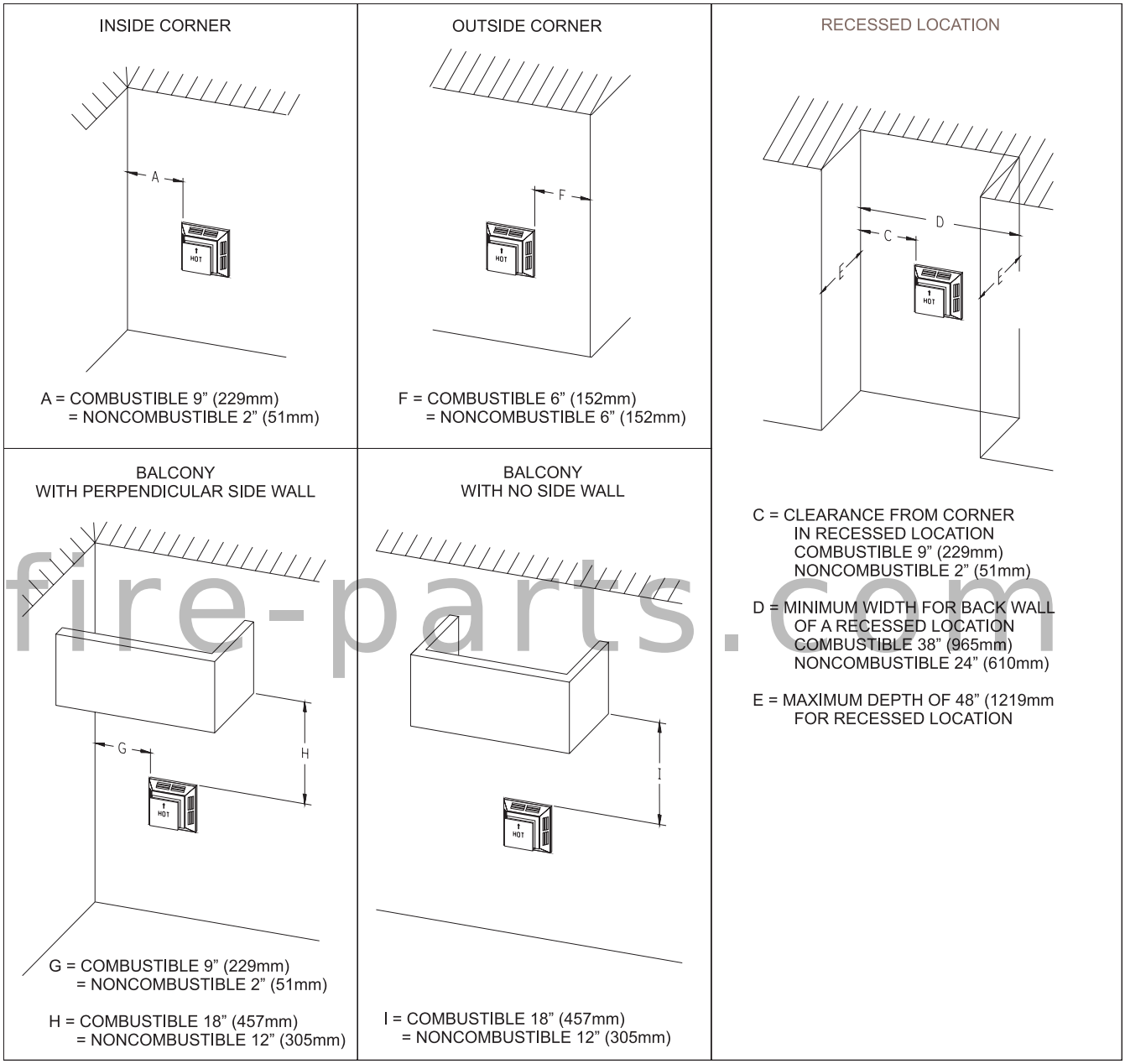

fire-parts.com

Figure 14

Vertical Sidewall Installations

Important! Minimum clearance between vent pipes and combustible materials is 3 inch (76 mm) on top, and 1 inch(25 mm) on bottom and sides.

Important! When vent termination exits through foundation less than 20 inch (508 mm) below siding outcrop, the vent pipe must extend outward so that the horizontal vent termination is located flush to, or beyond the outcrop siding.

Information on Various Venting Routes and Components

Important: It is always best to locate the fireplace in such a way that minimizes the number of offsets and horizontal vent length.

Since it is very important that the venting system maintain its balance between the combustion air intake and the flue gas exhaust, certain limitations as to vent configurations apply and must be strictly adhered to.

The graph showing the relationship between vertical and horizontal side wall venting will help to determine the various vent lengths allowable.

The horizontal vent run refers to the total length of vent pipe from the flue collar of the fireplace to the face of the outer wall.

Venting termination shall not be recessed into wall or siding.

ATTENTION: Vinyl Soffit, Vinyl Ceiling, Vinyl Overhang Disclaimer

Clearances are to heat resistant material (i.e. wood, metal). This does not include vinyl. Empire Comfort Systems Inc. will not be held responsible for heat damage caused from terminating under vinyl overhangs, vinyl ceilings or vinyl ventilated/unventilated soffits.

VENT TERMINATION CLEARANCES

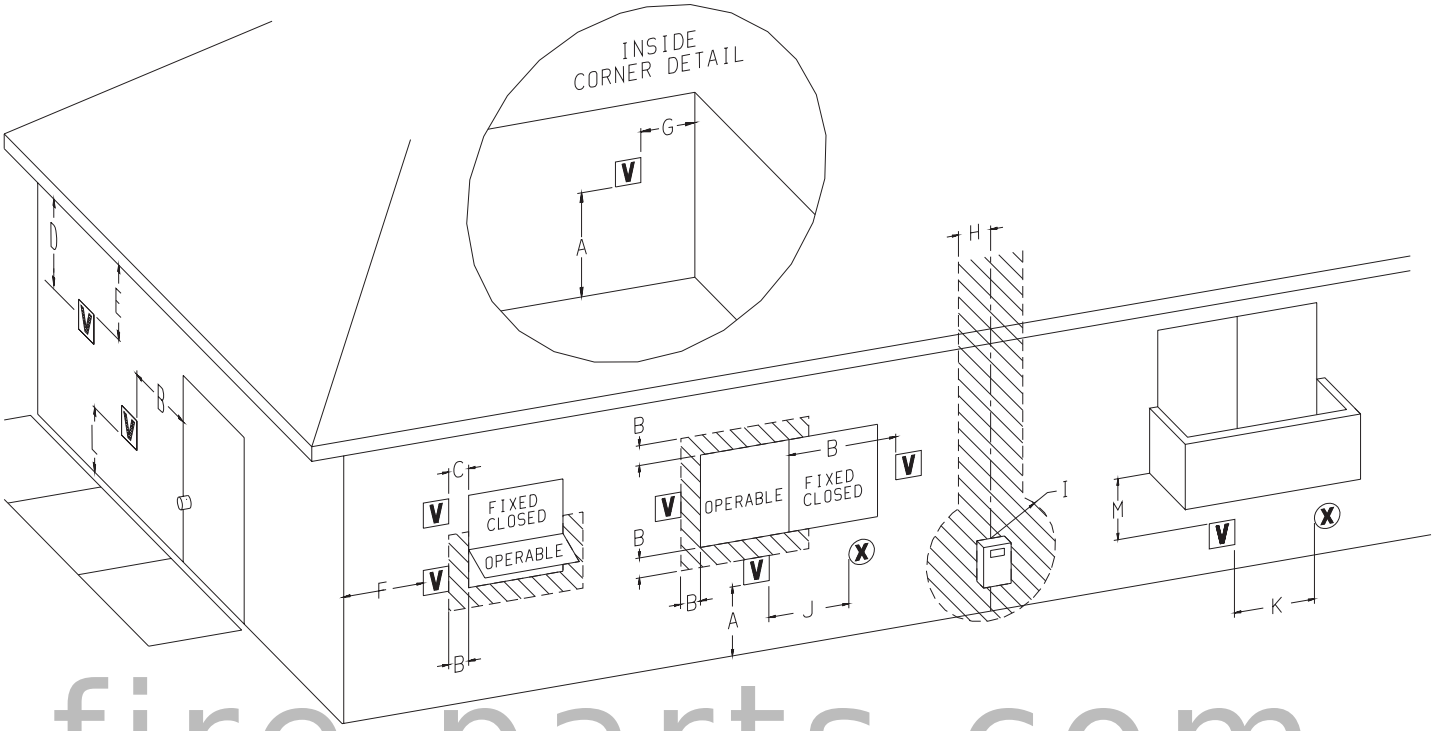

fire-parts.com

V VENT TERMINAL X AIR SUPPLY INLET AREA WHERE TERMINAL IS NOT PERMITTED

	Canadian Installations1	US Installations2
A= Clearance above grade, veranda, porch, deck, or balcony	12 in (30 cm)	12 in (30cm)
B= Clearance to window or door that may be open	12 in (30 cm) for appliances > 10,000 Btuh (3 kW) and ≤ 100,000 Btuh (30 kW)	9 in (23 cm) for appliances > 10,000 Btuh (3 kW) and ≤ 50,000 Btuh (15 kW)
C= Clearance to permanently closed window	12 in (30 cm)	12 in (30 cm)
D= Vertical clearance ventilated soffit located above the terminal within a horizontal distance of 2 feet (61 cm) from the center line of the terminal	18 in (45 cm) Minimum	18 in (45 cm) Minimum
E= Clearance to unventilated soffit	18 in (45 cm) Minimum	18 in (45 cm) Minimum
F= Clearance to outside corner	See Page 14	See Page 14
G= Clearance inside corner	See Page 14	See Page 14
H= Clearance to each side of center line extended above meter/regulator assembly	3 ft (91 cm) within a height 15 ft (4.5 m) above the meter/regulator assembly	3 ft (91 cm)

ATTENTION: Vinyl Soffit, Vinyl Ceiling, Vinyl Overhang Disclaimer

Clearances are to heat resistant material (i.e. wood, metal). This does not include vinyl. Empire Comfort Systems Inc. will not be held responsible for heat damage caused from terminating under vinyl overhangs, vinyl ceilings or vinyl ventilated/unventilated soffits.

	Canadian Installations1	US Installations2
I= Clearance to service regulator vent outlet	3 ft (91 cm)	6 ft (1.83 m) Minimum
J= Clearance to nonmechanical air supply inlet to building or the combustion air inlet to any other appliance	12 in (30 cm) for appliances > 10,000 Btuh (3 kW) and ≤ 100,000 Btuh (30 kW)	9 in (23 cm) for appliances > 10,000 Btuh (3 kW) and ≤ 50,000 Btuh (15 kW)
K= Clearance to a mechanical air supply inlet	6 ft (1.83 m)	3 ft (91 cm) above if within 10 ft (3 m) horizontally
L= Clearance above paved sidewalk or paved driveway located on public property	7 ft (2.13 m) †	7 ft (2.13 m)
M= Clearance under veranda, porch deck, or balcony	12 in (30 cm) ‡	12 in (30 cm)

1	In accordance with the current CSA B149.1, Natural Gas and Propane Installation Code
2	In Accordance with the current ANSI Z223.1/NFPA 54, National Fuel Gas Code
†	A vent shall not terminate directly above a sidewalk or paved driveway that is located between two single family dwellings and serves both dwellings
‡	Permitted only if veranda,, porch, deck, or balcony is fully open on a minimum of two sides beneath the floor.
*	For clearances not specified in ANSI Z223.1/NFPA 54 or CSA B149.1, one of the following shall be indicated:

Clearance in accordance with local installation codes and the requirements of the gas supplier.

GAS SUPPLY

The gas pipeline can be brought in through the right side of the fireplace. Consult the current National Fuel Gas Code, ANSI Z223.1 CAN/CGA-B149 (.1 or .2) installation code.

Recommended Gas Pipe Diameter

Pipe Length	Schedule 40 Pipe Inside Diameter (in inches)		Tubing, Type L Outside Diameter (in inches)	
	Nat.	L.P.	Nat.	L.P.
0-10 feet	1/2	3/8	1/2	3/8
10-40 feet	1/2	1/2	5/8	1/2
40-100 feet	1/2	1/2	3/4	1/2
100-150 feet	3/4	1/2	7/8	3/4

Note: Never use plastic pipe. Check to confirm whether your local codes allow copper tubing or galvanized.
Note: Since some municipalities have additional local codes, it is always best to consult your local authority and installation code.
The use of the following gas connectors is recommended:

— ANSI Z21.24 Appliance Connectors of Corrugated Metal Tubing and Fittings.
— ANSI Z21.45 Assembled Flexible Appliance Connectors of Other Than All-Metal Construction

The above connectors may be used if acceptable by the authority having jurisdiction. The state of Massachusetts requires that a flexible appliance connector cannot exceed three feet in length.

fire-parts.com

FLEXIBLE GAS LINE CONNECTION

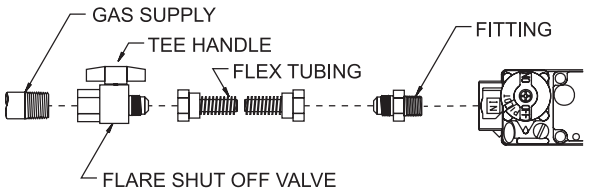

Figure 15

	Gas Supply Pressure (inches w.c.)		
	Minimum	Normal	Maximum
Natural Gas	4.5	7.0	14.0
LP (Propane)	10.8	11.0	14.0
	Manifold Pressure (inches w.c.)		
	Normal (HI)		
Natural Gas	3.5		
LP (Propane)	10.0		

A gas valve and ground joint union should be installed in the gas line upstream of the gas control to aid in servicing. It is required by the National Fuel Gas Code that a drip leg be installed near the gas inlet. See Figure 16. This should consist of a vertical length of pipe tee connected into the gas line that is capped on the bottom in which condensation and foreign particles may collect.

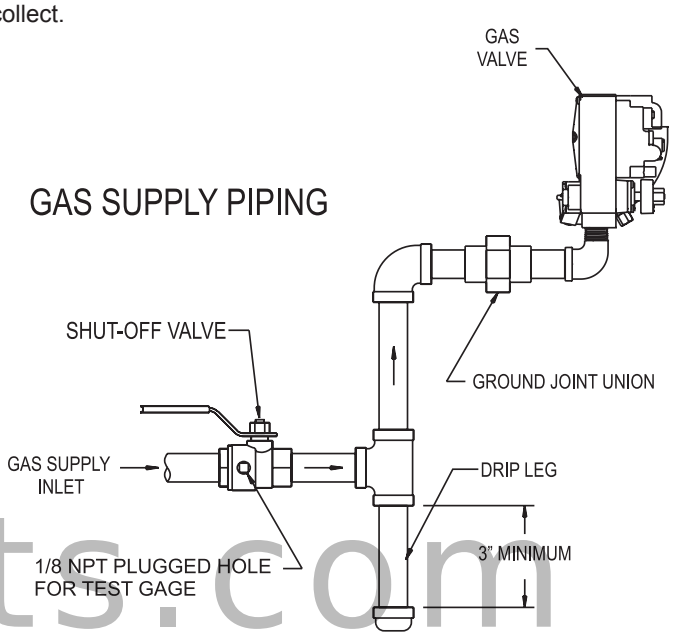

Figure 16

Installing a New Main Gas Shut-Off Valve (Check Local Code)
Each fireplace should have its own manual gas shut-off valve. A manual main gas shut-off valve should be located in the vicinity of the fireplace. Where none exists, or where its size or location is not adequate, contact your local authorized installer for installation or relocation.
Compounds used on threaded joints of gas piping shall be resistant to the action of liquefied petroleum gases. The gas lines must be checked for leaks by the installer. This should be done with a soap solution watching for bubbles on all exposed connections, and if unexposed, a pressure test should be made.

Never use an exposed flame to check for leaks. Fireplace must be disconnected from piping at inlet of control valve and pipe capped or plugged for pressure test. Never pressure test with fireplace connected; control valve will sustain damage!

NOTE: The millivolt gas controls are equipped with a captured screw type pressure test point, therefore it is not necessary to provide a 1/8 inch test point up stream of the control.
When using copper or flex connector use only approved fittings.
The fireplace and it's individual shut off valve must be disconnected from supply piping system during any pressure testing of that system at test pressures in excess of 1/2 psig (3.5 kPa).
The fireplace must be isolated from the gas supply piping system by closing its individual manual shut off valve during any pressure testing of the gas supply piping system at test pressures equal to or less than 1/2 psig (3.5 kPa).
Attention! If one of the procedures results in pressures in excess of 1/2 psig (14in w.c.) (3.5 kPa) on the fireplace gas valve, it will result in a hazardous condition.

GAS SUPPLY

Checking Manifold Pressures

Both Propane and Natural gas valves have a built-in pressure regulator in the gas valve. Natural gas models will have a manifold pressure of approximately 3.5in w.c. (.871 kPa) at the valve outlet with the inlet pressure to the valve from a minimum of 4.5in w.c. (1.120 kPa) for the purpose of input adjustment to a maximum of 14.0in w.c. (3.484 kPa). Propane gas models will have a manifold pressure approximately 10.0in w.c. (2.49 kPa) at the valve outlet with the inlet pressure to the valve from a minimum of 10.8in w.c. (2.68 kPa) for the purpose of input adjustment to a maximum of 14.0in w.c. (3.484 kPa).

⚠ CAUTION

If one of the procedures results in pressures in excess of 1/2 psig (14in w.c.) (3.5 kPa) on the fireplace gas valve, it will result in a hazardous condition.

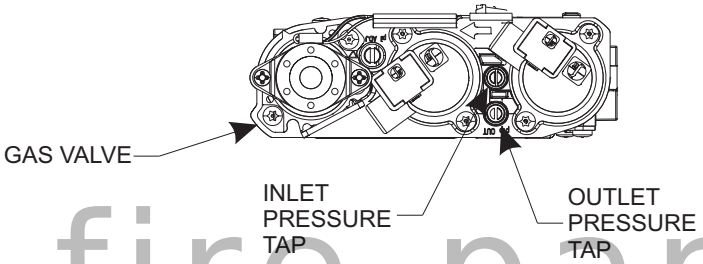

Figure 17

Gas Line Connection

Remove the access panel from the right side of the fireplace shown in Figure 18 to access the gas valve, gas flex line, junction box, and system wiring.

Attach the gas flex line to the pre-installed gas line. Refer to the Gas Supply section in this manual for details on the installation requirements for the gas supply line.

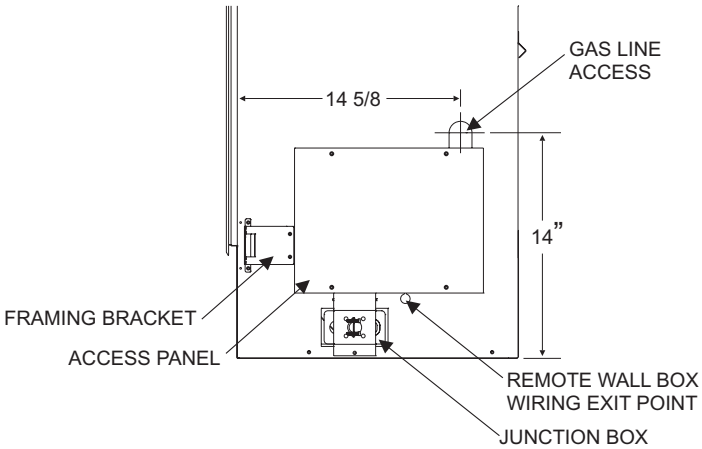

Figure 18

fire-parts.com

ELECTRICAL CONNECTIONS

⚠ CAUTION

All wiring should be done by a qualified electrician and shall be in compliance with all local, city and state building codes. Before making the electrical connection, make sure that the main power supply is disconnected. The fireplace, when installed, must be electrically grounded in accordance with local codes, or in the absence of local codes, with the National Electrical Code ANSI/NFPA 70 (Latest Edition).

A factory installed junction box is located on the lower right side of the fireplace. Wiring must be fed to the junction box and attached to the receptacle that is provided. Leave approximately 6in of wire in the junction box for connection.
Attach black wire to one side of the receptacle and white wire to opposite side of receptacle. The ground wire should be attached to the green (ground) screw. **See Figure 19.**

JUNCTION BOX CONNECTIONS

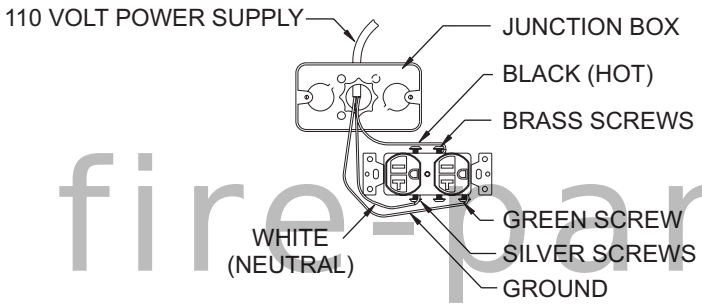

Figure 19

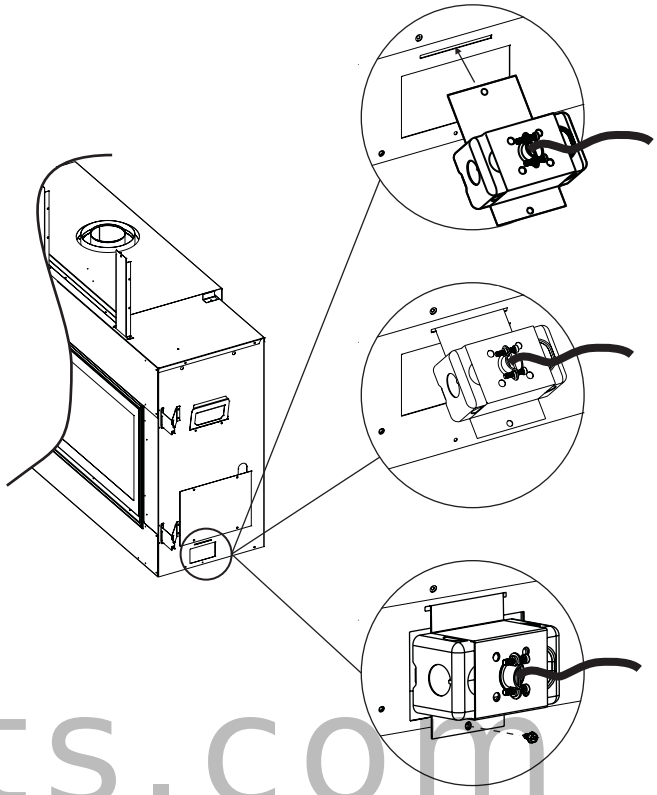

Figure 20

fire-parts.com

Install the receptacle into the junction box. Attach cover plate. After the wiring is completed to the junction box and receptacle, install the junction box to the lower right side of the fireplace as shown in figure 20. Insert the top flange of the retainer bracket into the slot on the fireplace. Rotate the junction box assembly downward, and secure with a screw below the junction box. **See Figure 20.**

ELECTRICAL CONNECTIONS

Once the Junction box has been installed with the receptacle outlets facing inward towards the fireplace, locate the 3-prong power cord from the control module and plug into the receptical. The fireplace is supplied with a User Interface wall box that must be installed in a standard plastic outlet box (not provided). A low voltage orange or blue box is recommended. The user interface wall box must be placed in the wall within ten feet from the right side of the fireplace. A 10ft. battery and user interface extension wire harness is supplied.

The red and black battery extension harness must be connected to the red and black mating connector pre-installed on the control module. The mating connector can be located inside the fireplace below the gas valve. See Figure 22.

The user interface extension wire harness must be routed through the lower rectangular opening below the gas valve. Plug the white connector into the mating user interface connection on the control module. See Figures 21, 22 and wiring diagram on page 52.

Locate and install the 5/8in diameter plastic snap-in grommet over the low-voltage battery and interface extension harnesses at the right side of the fireplace. Snap the grommet into the hole in the side of the fireplace just under the access panel opening. See Figure 22.

Run the extension wiring to the user interface wall box and connect the white connector to the remote receiver battery box. Install the battery box into the wall outlet box, then install the white remote cover supplied with the provided screws.

Figure 21

fire-parts.com

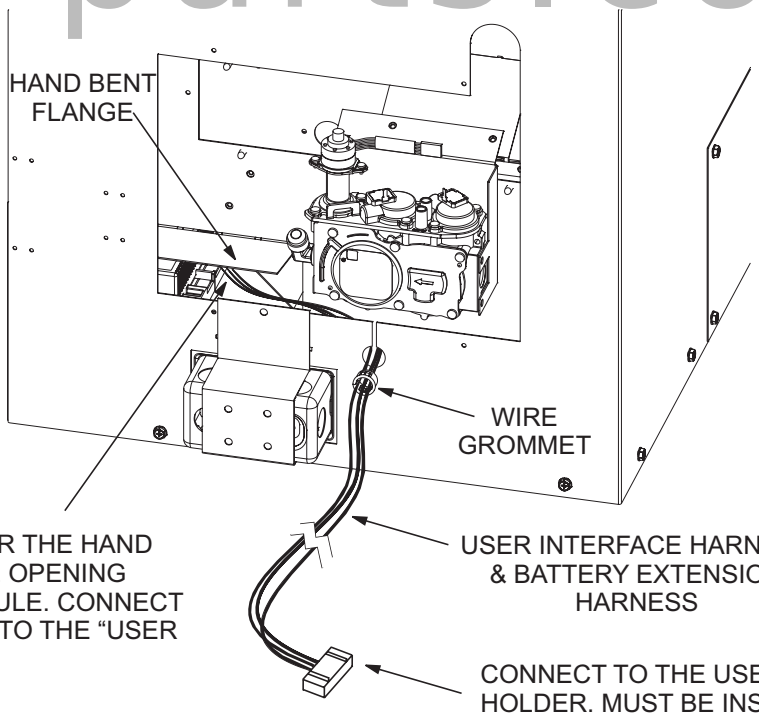

NOTE: OUTER ACCESS DOOR REMOVED. REPLACE AFTER ALL WIRE AND GAS CONNECTIONS HAVE BEEN MADE

Figure 22

Framing

This fireplace can be elevated off the floor provided that the fireplace is properly supported by framing materials and the ceiling clearances are maintained.

Fireplace framing can be built before or after the fireplace is set in place. Framing should be positioned to accommodate wall covering and fireplace facing material. The fireplace framing should be constructed of 2 x 4 lumber. Refer to **Figure 23** for minimum framing dimensions.

⚠ CAUTION

MEASURE FIREPLACE DIMENSIONS AND VERIFY FRAMING METHODS, AND WALL COVERING DETAILS BEFORE FRAMING CONSTRUCTION BEGINS.

Framing dimension A includes a 13-inch clearance for framing standoffs on fireplace. After installing fireplace into framing, the non-combustible board must cover the 13-inch opening above the fireplace.

Note: For finishing to top of fireplace, refer to **Figures 28 & 30.**

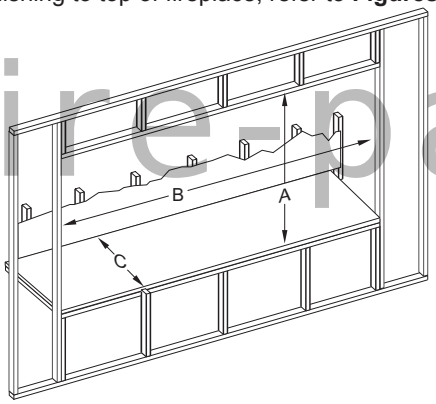

	DVLL60
A	50-3/8in
B	79-5/8in
C	21-1/2in

Figure 23

Construction of a Fireplace Chase

A chase is a vertical box-like structure built to enclose the gas fireplace and/or its vent system. In cooler climates the vent should be enclosed inside the chase.

NOTICE: Treatment of ceiling firestops and wall shield firestops and construction of the chase may vary with the type of building. These instructions are not substitutes for the requirements of local building codes. Therefore, you MUST check local building codes to determine the requirements to these steps.

A chase should be constructed in the manner of all outside walls of the home to prevent cold air drafting problems. The chase should not break the outside building envelope in any manner. Walls, ceiling, base plate and cantilever floor of the chase should be insulated. Vapor and air infiltration barriers should be installed in the chase as per regional codes for the rest of the home. Additionally, in regions where cold air infiltration may be an issue, the inside surfaces may be sheet rocked and taped (or an equivalent method may be used) to achieve maximum air tightness.

To further prevent drafts, the wall shield and ceiling firestops should be caulked with caulk rated for a minimum of 300°F continuous exposure rating to seal gaps. Gas line holes and other openings should be caulked or stuffed with unfaced insulation. If the fireplace is being installed on a cement surface, a layer of plywood may be placed underneath to prevent conducting cold up into the room.

Framing and Finishing

1. Choose fireplace location. See pages 14 - 15.
2. Frame in fireplace with a header across the top. It is important to allow for finished face when setting the depth of the fireplace.
3. Secure the four framing brackets and hand bend them into a V shape as shown in Figure 24. Secure with #10 x 1/2in hex-head screws.
4. Locate the nailing flanges on the sides of the fireplace (two each side). See Figure 24.

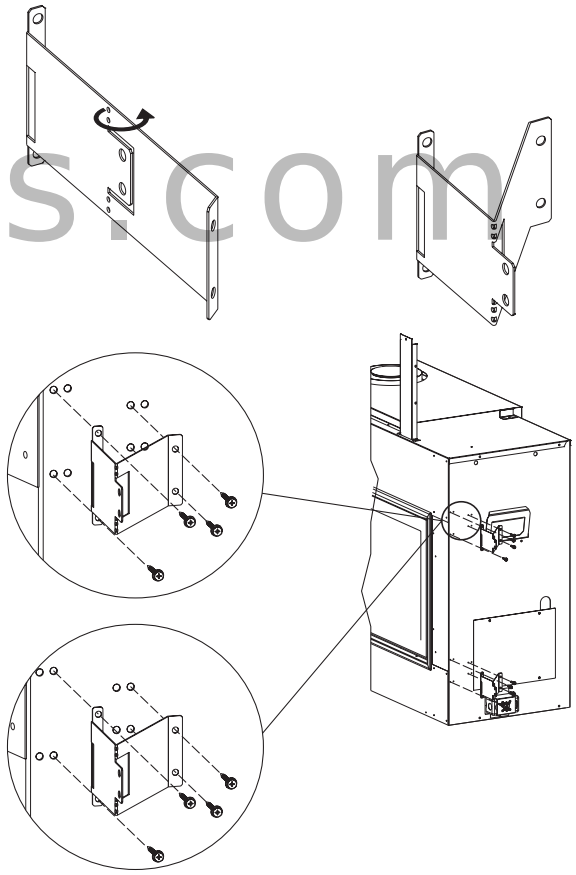

Figure 24

fire-parts.com

5. Secure fireplace to framing with nailing flanges. Preset depth to suit facing material (flush or 1/2in set back depths). See Figure 25.

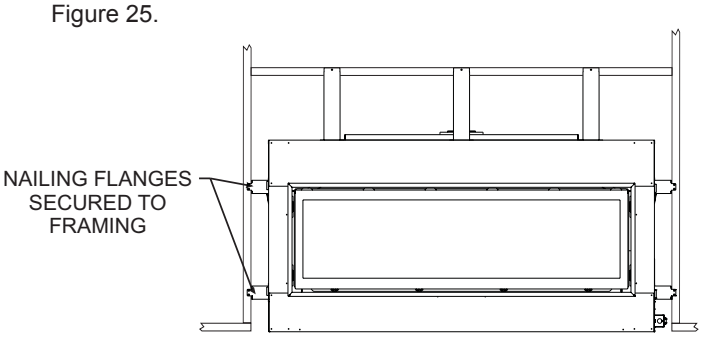

Figure 25

6. Attach three middle mount framing brackets to the top front edge of the fireplace. These brackets support the supplied non-combustible board above the fireplace. Preset depth to suit facing material (flush or 1/2in set back depths). See Figure 26.

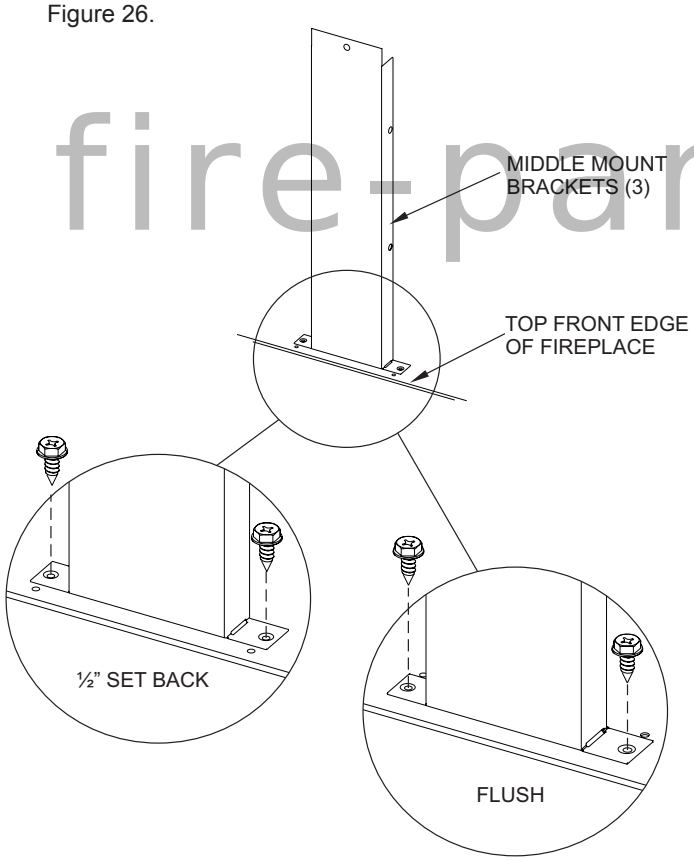

Figure ____

fire-parts.com

Vent Pipe Clearance

Note: Maintain one inch of clearance around vertical vent pipe. **See Figure 27**.

For horizontal vent, maintain a minimum 1 inch clearance to the bottom and sides of the vent, and 3 inch clearance to combustibles above the vent pipe. **See Figure 28.**

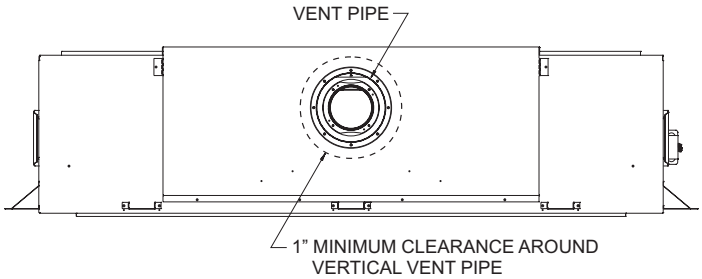

Figure 27

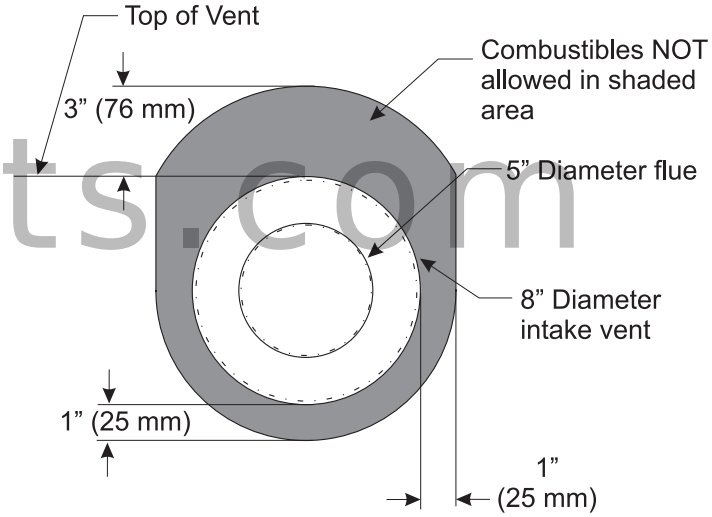

Figure 28

Flush Wall Installation

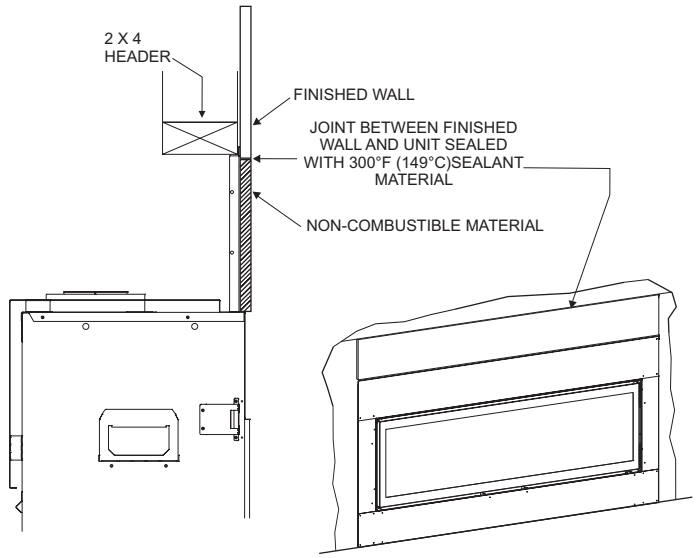

Figure 29

Finishing Methods

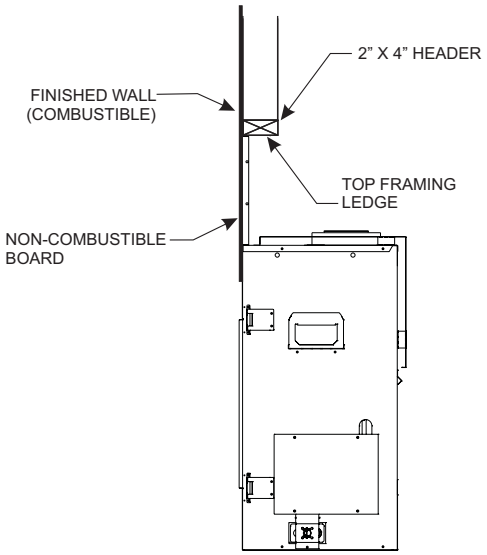

Figure 30

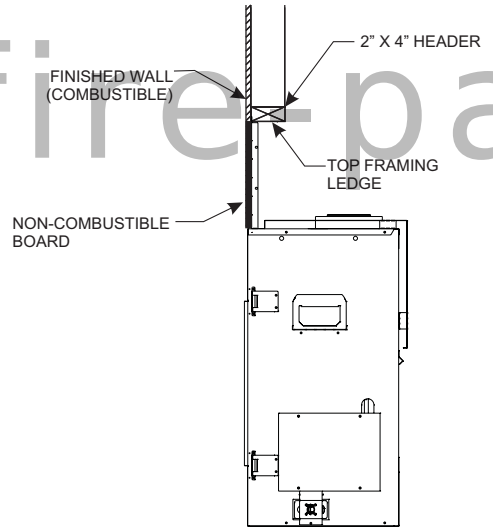

Figure 31

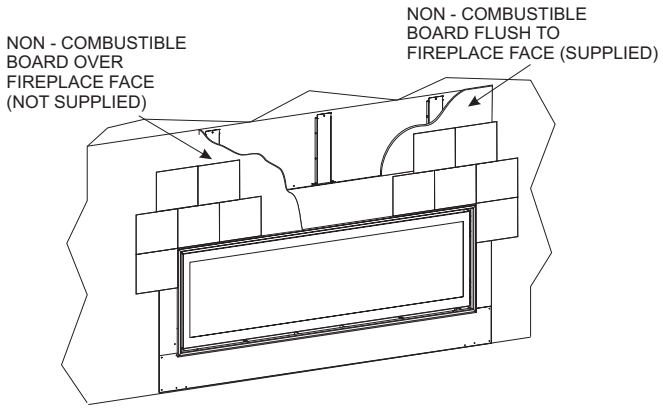

Figure 32

Attention: Cold climate installation recommendation: When installing this fireplace against a non-insulated exterior wall, it is recommended that the outer walls be insulated to conform to applicable insulation codes.

Vent Runs

In planning the installation for the fireplace, it is necessary to install certain components before the fireplace is completely positioned and installed. These include the direct vent system, gas piping and electrical wiring.

The fireplace can be mounted on any of the following surfaces:

1. A flat, hard combustible surface.
2. A raised wooden platform.

VERTICAL, 90-DEGREE ELBOW WITH HORIZONTAL TERMINATION

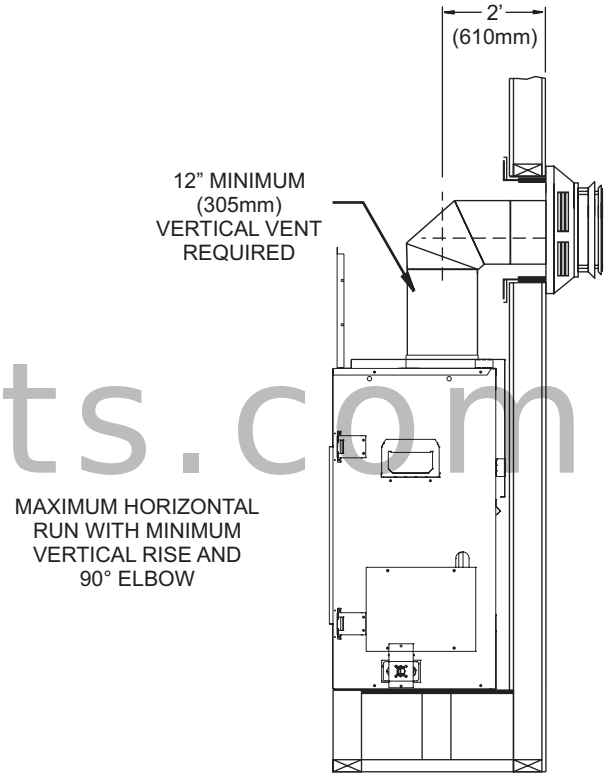

Figure 33

Finishing Options

- Non-Combustible board installed over the fireplace face (framing bracket flush). See Figure 29.
- Non-Combustible board installed flush to face (framing brackets at 1/2-inch set back). See Figure 30.
- Figure 31 shows both finishing options.
- Use Non-Combustible materials where indicated for the fireplace installation. Non-combustible materials do not ignite or burn as a result of using the fireplace. These include metal, brick, ceramic, concrete, slate, glass and plaster. Adhesives must be rated for high temperatures. Any mechanical fasteners used to install material must also be non-combustible, including wall anchors and tile spacers. Materials that pass the ASTM E 136 test (Standard Test Method for Behavior of Materials in a Vertical Tube Furnace at 750C) are considered non-combustible.

fire-parts.com

VERTICAL, 90 DEGREE ELBOW TO HORIZONTAL OUT THE WALL (12in minimum rise before elbow)

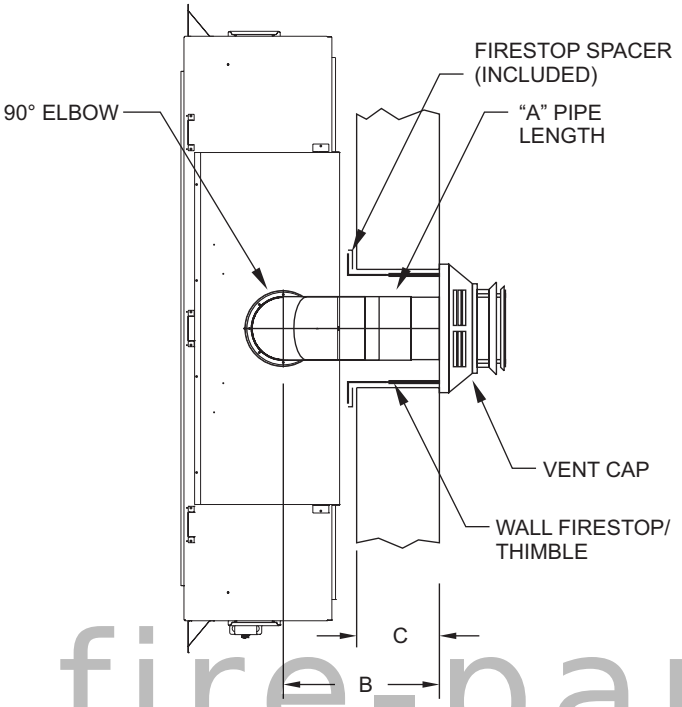

A	B	C
6in	14in	7in Maximum
9in	15-1/2in - 18in	8-1/2in - 11in
12in	18in - 20-1/2in	11in - 13-1/2in

Figure 34

CORNER INSTALLATION - VERTICAL, 90 DEGREE ELBOW TO HORIZONTAL OUT THE WALL (12in minimum rise before elbow)

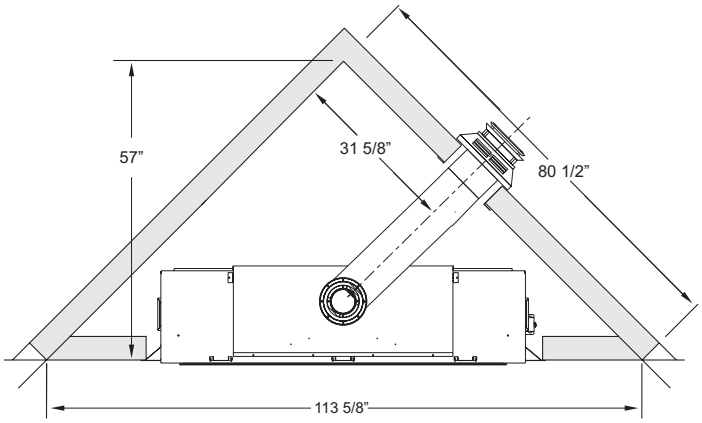

NOTE: DIMENSIONS SHOWN WITH FRAMING SET ½" BEHIND THE FIREPLACE FACE

Figure 35

Note: Corner installation will require more vertical vent pipe than just the minimum required depending on wall thickness and horizontal dimension. Refer to Figure 44, page 27.

fire-parts.com

VENT SYSTEM IDENTIFICATION

Begin the vent system installation by selecting the type of venting to be installed and the path it will take. Verify clearances are met throughout the path of the venting system.

NOTICE: Some fireplaces cannot be vented out the rear of the fireplace.

Determine how the vent system will be terminated out the side of the house or through the roof. Verify clearances for the termination.

When selecting a vent system for use with the fireplace, refer to the “Special Vent Systems” section in this manual to determine what systems are acceptable. Check all clearances and venting components. Identify if any problems exist in the vent system. Use **Figure 44** on page 27 for top venting to eliminate issues after installation. Check pipe diameter on vent system and fireplace to verify the size is the same.

***NOTICE*: All outer connection joints must be sealed with aluminum tape, screws or silicone sealant rated above 300°F/149°C. The inner flue joints do not require any sealant.**

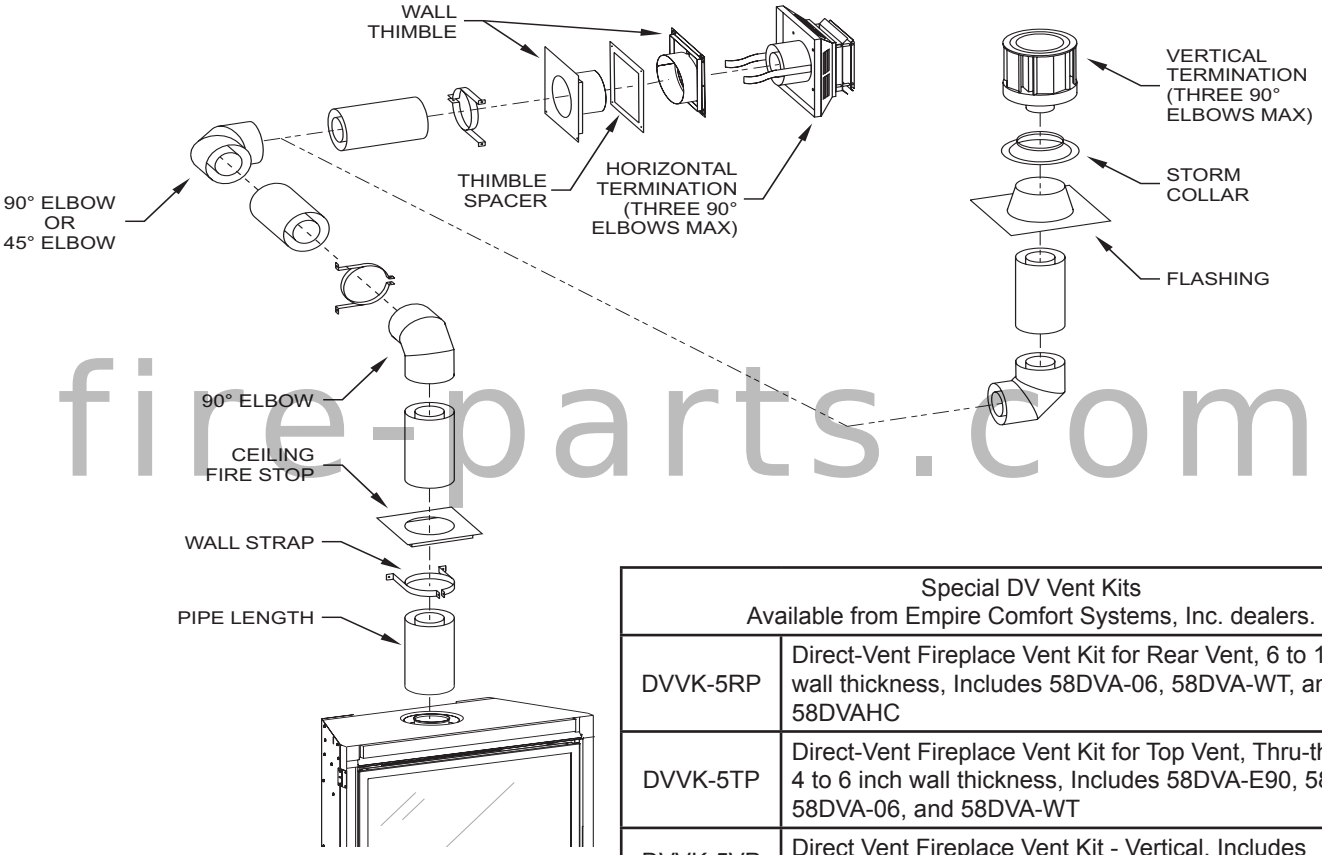

fire-parts.com

Figure 36

Special DV Vent Kits Available from Empire Comfort Systems, Inc. dealers.	
DVVK-5RP	Direct-Vent Fireplace Vent Kit for Rear Vent, 6 to 12 inch wall thickness, Includes 58DVA-06, 58DVA-WT, and 58DVAHC
DVVK-5TP	Direct-Vent Fireplace Vent Kit for Top Vent, Thru-the-wall, 4 to 6 inch wall thickness, Includes 58DVA-E90, 58DVA-HC, 58DVA-06, and 58DVA-WT
DVVK-5VP	Direct Vent Fireplace Vent Kit - Vertical, Includes 58DVA-VCH, 58DVA-SC, and 58DVA-F6
DVVK-5TS	Top Vent Kit (Horizontal) - 4½in to 6in wall thickness (114.3 mm to 152 mm)
DVVK-5F	Horizontal Flex Vent Kit (4' Flex) (1.22m)

VENT SYSTEMS

The following vent systems are acceptable for use with the DVLL60BP90 series fireplaces:

Simpson Duravent® GS 5in - 8in
American Metal Products 5in - 8in
Selkirk Direct-Temp® 5in - 8in
Security Secure Vent® 5in - 8in
Excel DV Venting 5in - 8in
Empire Flexvent Kit DVVK-5F
BDM - 5in - 8in
Metal Fab 5in - 8in

VENTING FIREPLACE - TOP

⚠ WARNING

Use flue restrictor for vertically terminated fireplaces only. Do not use for horizontally terminated fireplaces.

Figures 37 to 40 show the location and recommended opening for the flue restrictor.
Installation of restrictor before venting is attached. See Figure 37.

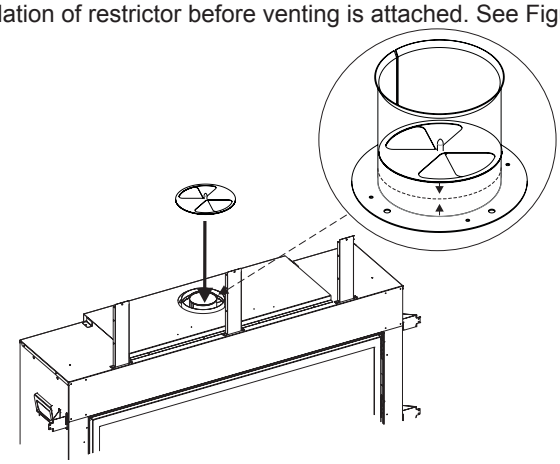

Figure 37

Note: When installing flue restrictor, install with screw pointing downward.
For installation of the restrictor after the venting is installed, see Figures 38 & 39.

fire-parts.com

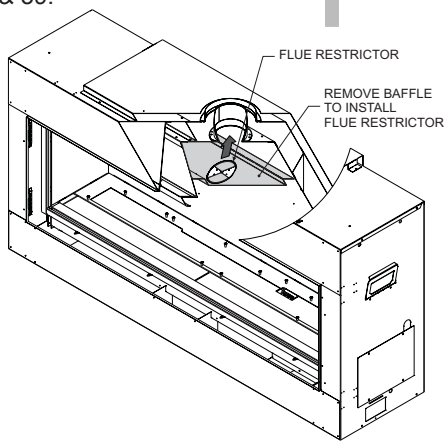

Figure 38

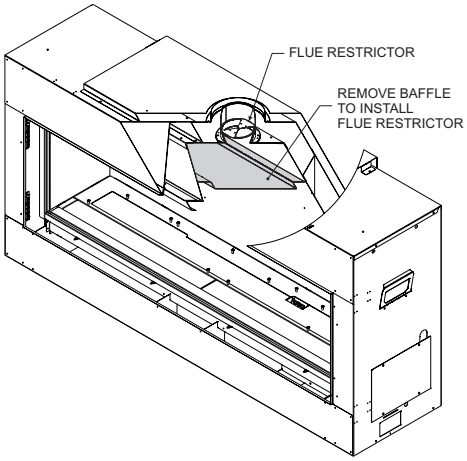

Figure 39

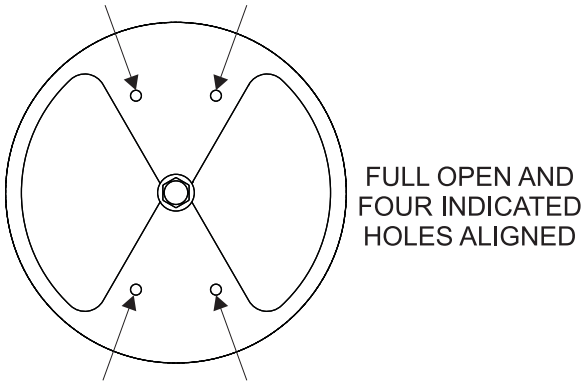

Figure 40

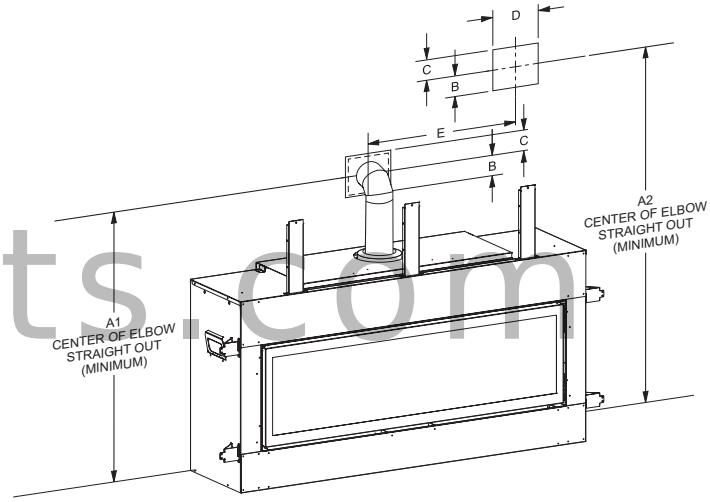

FIREPLACE SERIES	HARD ELBOW DIMENSIONS			
	A1	B	C	D
DVLL60	54-3/4in	5-3/8in	7-5/8in	10-5/8in

FIREPLACE SERIES	FLEX PIPE 90 DEGREE BEND			
	A2	B	C	D
DVLL60	54-3/4in	5-3/5in	7-5/8in	10-5/8in

MINIMUM HOLE LOCATION DIMENSIONS FOR THROUGH-THE-WALL HORIZONTAL INSTALLATIONS WITH 90 DEGREE ELBOW AND 12in RISE OFF TOP OF FIREPLACE

SEE FIGURE 44 ON PAGE 27 FOR PERMISSIBLE HORIZONTAL AND VERTICAL RUN DIMENSIONS.

Figure 41

VENTING FIREPLACE - TOP

Positioning the Fireplace
Determine the exact position of the fireplace so the direct-vent termination will be centered (if possible) between two studs. This will avoid any extra framing. All vent kit pipes should be assembled on the fireplace after the fireplace is moved into the final position.

Cutting the Hole
After the fireplace has been positioned in its permanent location, the hole through the exterior wall can be cut. This hole must be 13in (330mm) high x 10-5/8in (270mm) wide with its center line determined by the amount of vertical rise and horizontal run of the termination. **See Figures 42 & 43.** When locating the hole it must be noted that the bottom of the cap must be minimum of 12in (305mm) above the ground level, and top of the cap must be no less than 18in (457mm) below a combustible projection, and no closer than 9in (229mm) to any wall running parallel to vent termination.

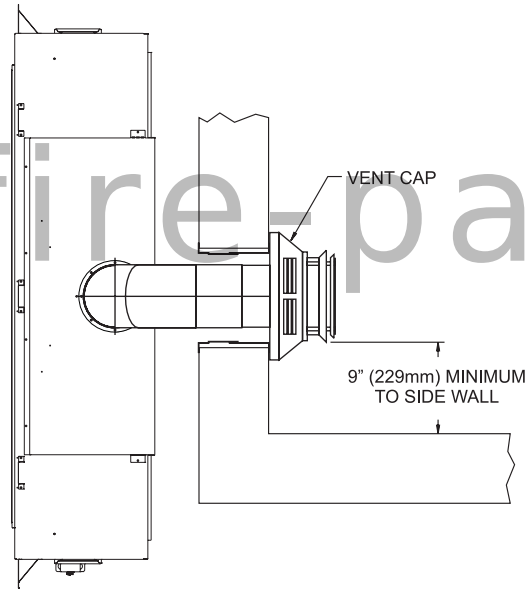

Figure 42

Below Grade Installation
When it is not possible to meet the required vent termination clearances of 12 inch (305 mm) above grade level, a snorkel kit is recommended. It allows installation depth down to 7 inch (178 mm) below grade level. The 7 inch (178 mm) is measured from the center of the horizontal vent pipe as it penetrates through the wall.
Ensure the sidewall venting clearances are observed. If venting system is installed below ground, we recommend a window well with adequate and proper drainage to be installed around the termination area.

TYPICAL BASEMENT INSTALLATION

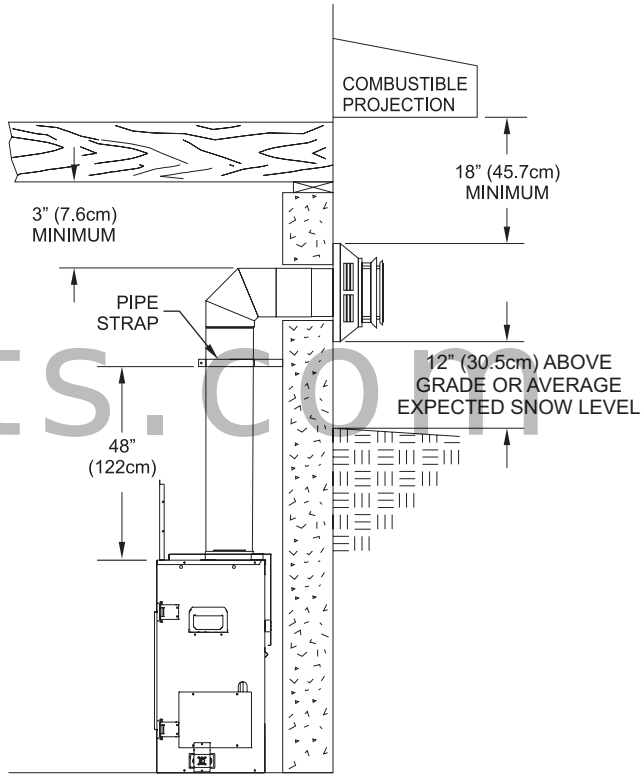

Figure 43

fire-parts.com

VENTING FIREPLACE - TOP

To Use the Vent Graph

1. Determine the height of the center of the horizontal vent pipe. Using this dimension on the Sidewall Vent Graph, locate the point it intersects with the slanted graph line.
2. From the point of this intersection, draw a vertical line to the bottom of the graph.
3. Select the indicated dimension, and position the fireplace in accordance with same.

EXAMPLE A:
If the vertical dimension from the floor of the fireplace is 32 feet, the horizontal run to the outer wall flange must not exceed 5 feet.

EXAMPLE B:
If the vertical dimension from the floor of the fireplace is 24 feet, the horizontal run to the outer wall flange must not exceed 10 feet.

EXAMPLE C:
If the horizontal run to the outer wall flange is 17 feet, the vertical dimension from the floor of the fireplace to the center of the termination must not be less than 7 feet 6 inches.

SPECIAL NOTE: For each 45° elbow installed in the horizontal run, the length of the horizontal run MUST be reduced by 18 inches. Reduce by 3 feet for every 90° elbow. This does not apply if the 45° elbows are installed on the vertical part of the vent system.

Example: According to the chart the maximum horizontal vent length is 20 feet and if two 45° elbows are required in the horizontal vent it must be reduced to 17 feet.

The maximum number of 45° elbows permitted per side wall installation is two. These elbows can be installed in either the vertical or horizontal run.

The maximum number of 90° elbows in a vent run is three.

VENTING GRAPH (Dimensions in Feet)

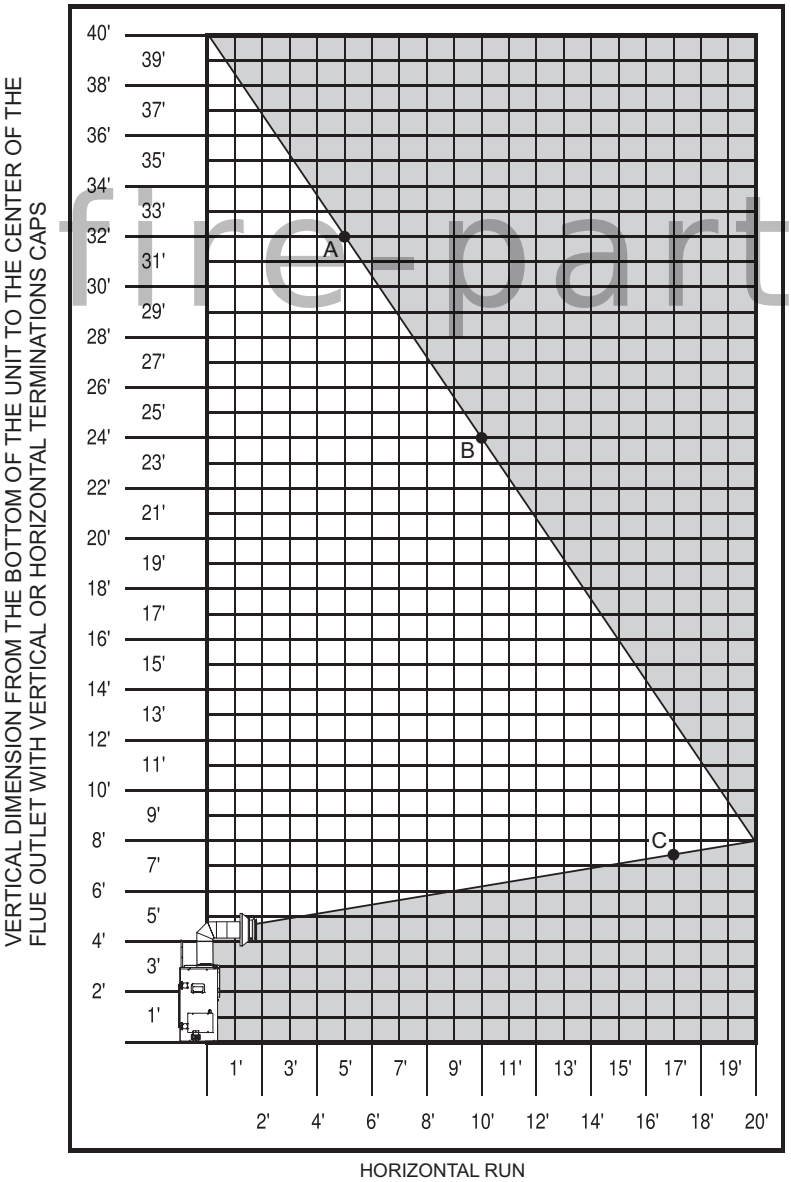

Acceptable vertical and horizontal vent run. (40' maximum vertical and 20' maximum horizontal)

Unacceptable vertical and horizontal vent run. See text above for Examples A, B and C.

Figure 44

fireparts.com

TOP VENT - HORIZONTAL TERMINATION

One 90° Elbow

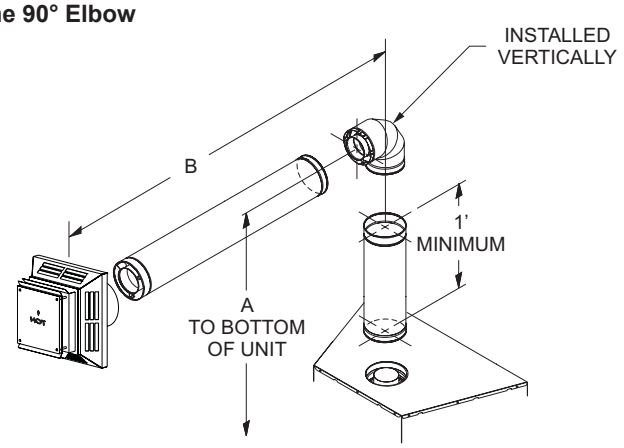

EXAMPLE VENT RUNS		
INITIAL PIPE LENGTH	A (Vertical)	B (Horizontal) MAXIMUM
(Dimensions in inches)		
12	55	NAT - 24 LP - 12
24	67	42
36	79	108 (9ft)
48	91	168 (14ft)

Figure 45

Note: Pipe straps must be used every 2 feet to secure venting.

Two 45° Elbows

Installation requirements to replace the first 90° elbow with two 45° elbows:

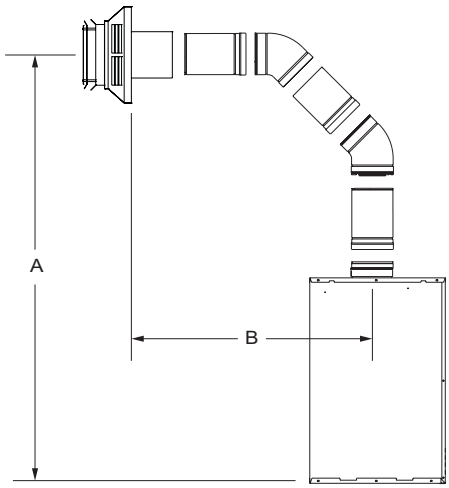

EXAMPLE VENT RUNS		
INITIAL PIPE LENGTH	A (Vertical)	B (Horizontal) MAXIMUM
(Dimensions in inches)		
12	66	72
24	80	132 (11ft)
36	91	204 (17ft)
48	103	240 (20ft)

Figure 46

Two 90° Elbows

Note: Subtract 3 feet from the total horizontal measurement for each 90° elbow installed horizontally. Subtract 1-1/2 feet from the total horizontal measurement for each 45° elbow installed horizontally.

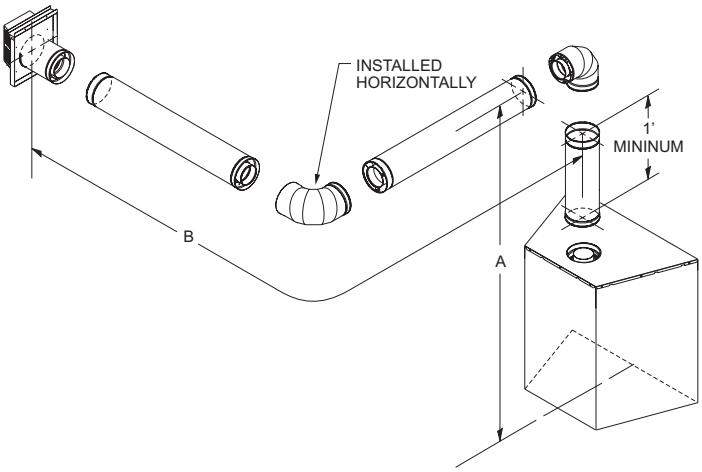

EXAMPLE VENT RUNS		
INITIAL PIPE LENGTH	A (Vertical)	B (Horizontal) MAXIMUM
(Dimensions in inches)		
12	55	0'
24	67	6
36	79	72 (6ft)
48	91	132 (11ft)

Figure 47

Three 90° Elbows

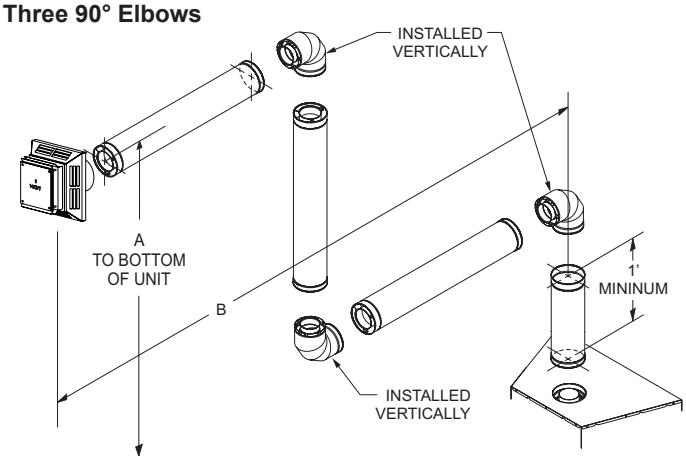

EXAMPLE VENT RUNS		
INITIAL PIPE LENGTH	A (Vertical)	B (Horizontal) MAXIMUM
(Dimensions in inches)		
12	55	18
24	67	24 (2ft)
36	79	90 (7ft, 6in)
48	91	114 (9ft, 6in)

Figure 48

fire-parts.com

TOP VENT - VERTICAL TERMINATION

No Elbows

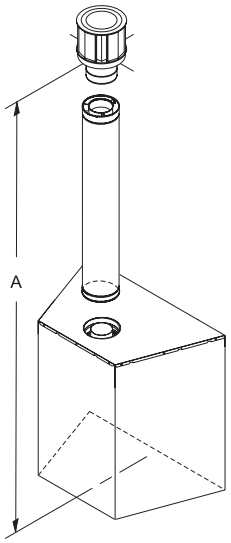

DIMENSIONS (in inches)	
MINIMUM	**MAXIMUM**
120 (10ft)	480 (40ft)

Figure 49

Two 90° Elbows

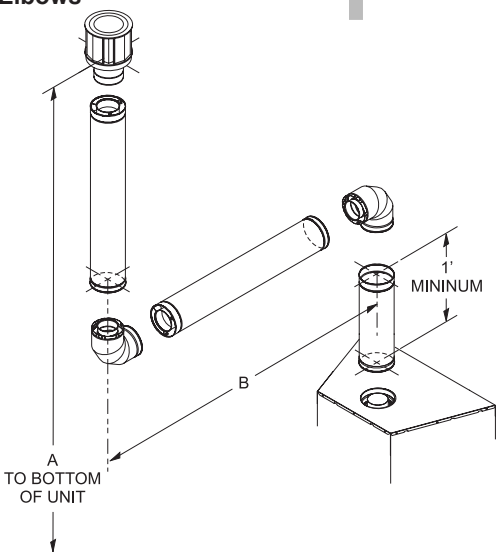

EXAMPLE VENT RUNS		
INITIAL PIPE LENGTH	**A (Vertical) MINIMUM**	**B (Horizontal) MAXIMUM**
(Dimensions in inches)		
12	120 (10ft)	222 (18ft, 6in)
24	120 (10ft)	222 (18ft, 6in)
36	120 (10ft)	222 (18ft, 6in)
48	120 (10ft)	222 (18ft, 6in)

*Maximum horizontal run is 100% of vertical, but cannot exceed 20 feet.

Figure 50

Three 90° Elbows

Note: Subtract 3 feet from the total horizontal measurement for each 90° elbow installed horizontally. Subtract 1-1/2 feet from the total horizontal measurement for each 45° elbow installed horizontally.

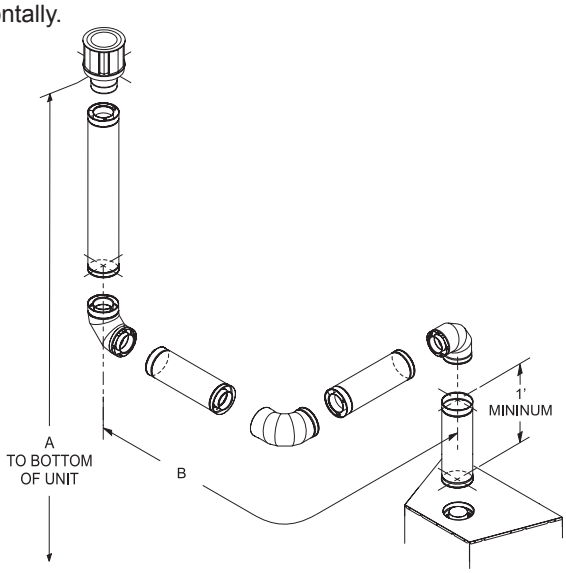

EXAMPLE VENT RUNS		
INITIAL PIPE LENGTH	**A (Vertical) MINIMUM**	**B (Horizontal) MAXIMUM**
(Dimensions in inches)		
12	120 (10ft)	186 (15ft, 6in)
24	120 (10ft)	186 (15ft, 6in)
36	120 (10ft)	186 (15ft, 6in)
48	120 (10ft)	186 (15ft, 6in)

*Maximum horizontal run is 100% of vertical, but cannot exceed 17 feet.

Figure 51

fire-parts.com

VERTICAL TERMINATION

Locate and mark the center point of the vent pipe using a nail on the underside of the roof. Drive the nail through the center point. Mark the outline of the roof hole around this center point.

NOTE: Size of the roof hole dimensions depend on the pitch of the roof. There must be a 1 inch (25 mm) clearance to the vertical pipe sections. This clearance is to all combustible material.

Cover the opening of the vent pipe and cut and frame the roof hole. Use framing lumber the same size as the roof rafters and install the frame securely. Flashing anchored to frame must withstand high winds. The storm collar is placed over this joint to make a water-tight seal. Non-hardening sealant should be used to completely seal this flashing installation.

Determining Minimum Vent Height Above the Roof.

⚠ WARNING

Major U.S. building codes specify minimum chimney and/or vent height above the roof top. These minimum heights are necessary in the interest of safety. These specifications are summarized in Figure 52.

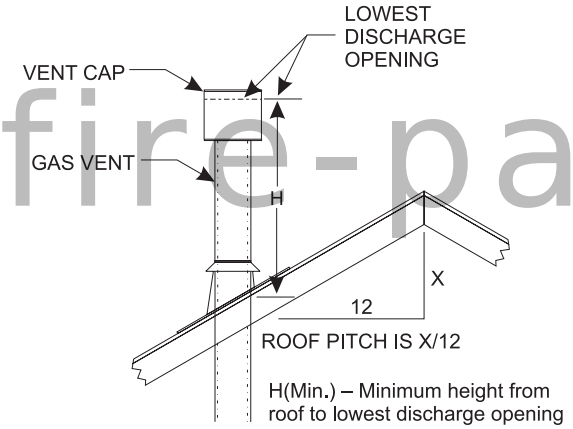

ROOF PITCH	H (Min.)
Flat to 6/12	12in (305 mm)
6/12 to 7/12	15in (381 mm)
Over 7/12 to 8/12	18in (457 mm)
Over 8/12 to 16/12	24in (610 mm)
Over 16/12 to 21/12	36in (914 mm)

Figure 52

Note that for steep roof pitches, the vent height must be increased. In high wind conditions, nearby trees, adjoining roof lines, steep pitched roofs, and other similar factors can result in poor draft, or down-drafting. In these cases, increasing the vent height may solve this problem.

Installing the Vent System in a Chase

A chase is a vertical box-like structure built to enclose the gas fireplace and/or its vent system. Vertical vent runs on the outside of a building may be, but are not required to be installed inside a chase.

⚠ CAUTION

Treatment of firestop spacers and construction of the chase may vary with the type of building. These instructions are not substitutes for the requirements of local building codes. Check local building codes to determine the requirements for these steps.

NOTE: Build the chase large enough to maintain the minimum clearance of combustible materials (including insulation) to the vent system. When installing the vent system in a chase, insulate the chase as you would the outside walls of your home. This is especially important in cold climates. Upon completion of chase framing, install the vent system by following the instructions in this manual.

The vertical termination cap for this fireplace must not be any closer than 24-in. to combustible materials. **See Figure 53**.

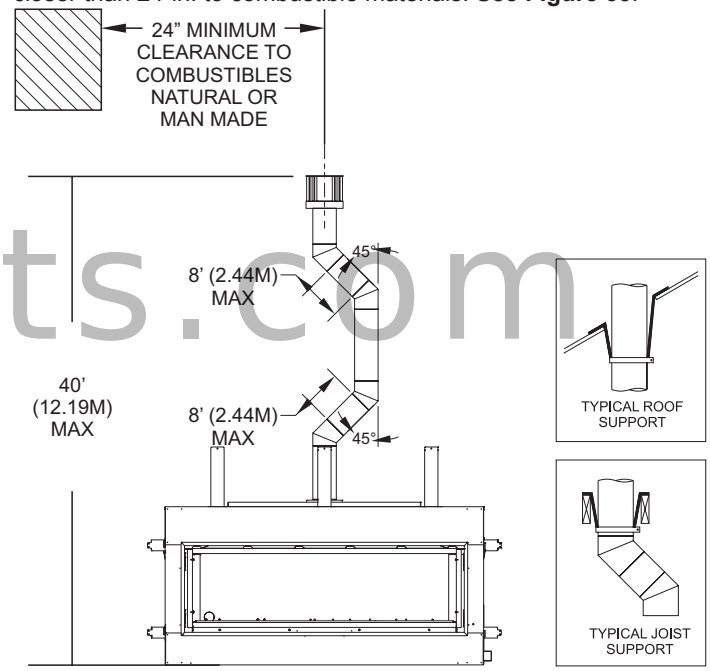

Figure 53

If two vertical terminations are run near each other, they may be placed a minimum of 12 inches between them if they are at the same height. See Figure 54. If two vent terminations are not at the same height, they must be positioned at least 24 inches apart to minimize draft issues between them.

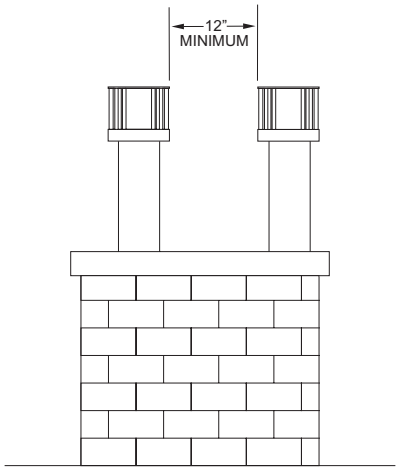

Figure 54

fire-parts.com

VERTICAL TERMINATION

Vertical Through-the-Roof Applications

Your Gas Fireplace has been approved for:

a) Vertical installations up to 40 feet in height.
b) Two sets of 45 degree elbow offsets within these vertical installations. From 0 to a maximum of 8 ft. a vent pipe can be used between elbows.
c) Wall straps must be used to support offset pipe every 4'.

This application will require that you first determine the roof pitch and use the appropriate venting components.

OFFSET CHART

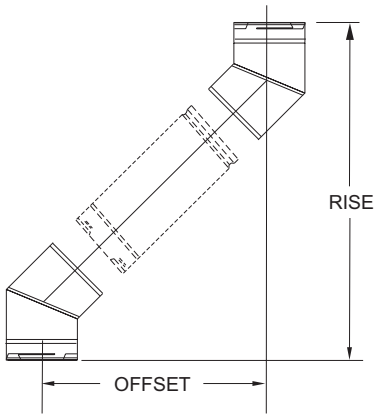

SIZE		5in X 8in	
ELBOW DEGREES	CHIMNEY SECTION	OFFSET INCHES	RISE INCHES
	Dimensions in Inches		
45°	0	5-5/8	15-3/8
45°	6	8-7/8	18-3/8
45°	9	10-7/8	20-5/8
45°	12	13	22-5/8
45°	24	21-3/8	31-1/8
45°	36	29-7/8	39-3/8
45°	36	28-7/8	39-3/8
45°	48	38-1/4	47-7/8

Figure 55

General Maintenance

Inspect venting system semi-annually as follows:

1. Check for corrosion areas of the venting system exposed to the elements. These will appear as rust spots or streaks and, in extreme cases, holes. Replace damaged components should immediately.
2. Remove the cap and shine a flashlight down the vent. Remove any bird nests or other foreign material.
3. Check for evidence of excessive condensate, such as water droplets forming in the inner liner and subsequently dripping out at joints. Condensate can cause corrosion of caps, pipe and fittings. It may be caused by having excessive lateral runs, too many elbows and exterior portions of the system being exposed to cold weather.
4. Inspect joints to verify that no pipe sections or fittings have been disturbed and, consequently, loosened. Also, check mechanical supports, such as wall straps or plumbers' tape for rigidity.

Venting termination shall not be recessed into a wall or siding. A removable panel or other means must be provided in the enclosure for visual inspection of the flue connection.

NOTE: This also pertains to vertical vent systems installed on the outside of the building.

Slide the vertical vent cap over the ends of the vent pipe and secure. **See Figure 56.**

fireparts.com

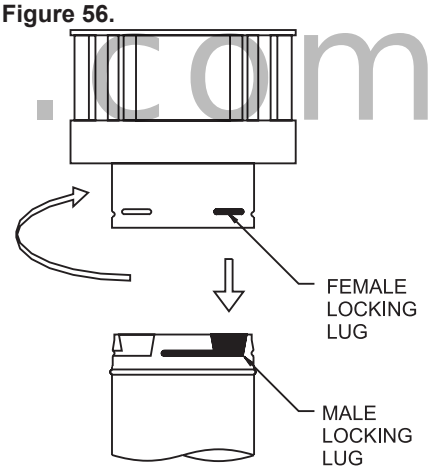

Figure 56

DVVK-5F FLEX VENT INSTRUCTIONS

The **DVVK-5F FLEX VENT KIT** includes the following components:

- (1) Horizontal Termination Cap
- (1) 4-foot section of Flex vent with spacers (5-inch flue/ 8-inch outer pipe) with flue adapter collar
- (1) Wall Firestop/Thimble Assembly
- Hardware pack that includes band clamps and screws

Maintain at least ½-inch rise for every 12 inches of vent run.

⚠ CAUTION

- **Because of sharp edges, always use gloves when handling the flex vent components.**
- **Always follow the general venting requirements for vent terminal location, vent lengths, and clearance to combustible materials.**
- **Always stretch and secure venting with wire or metal strapping to ensure that the horizontal runs do not sag.**
- **Vent connections should overlap a minimum of 1 inch for proper sealing.**

INSTALLATION

1. Unpack vent components and check that all items are included.
2. Check to see that the vent spacer springs are located around the flue vent at 8 inch intervals along its length. **See Figures 57 & 58.** If not, stretch the spacer springs to about 15 inches long and wrap them around the flue, then interlock the ends of each spring. Maintain equal distance between spring spacers.

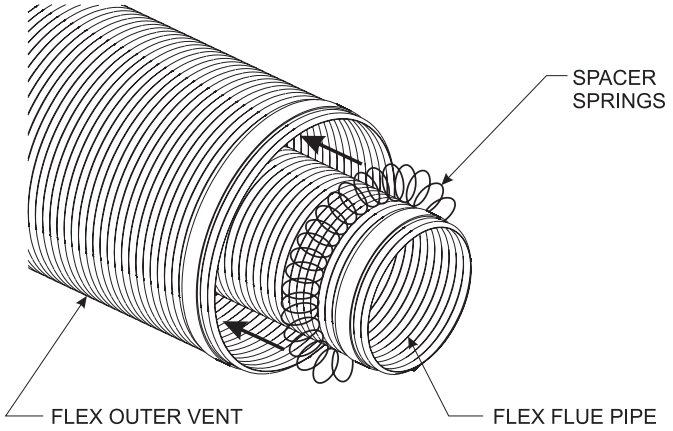

Figure 57

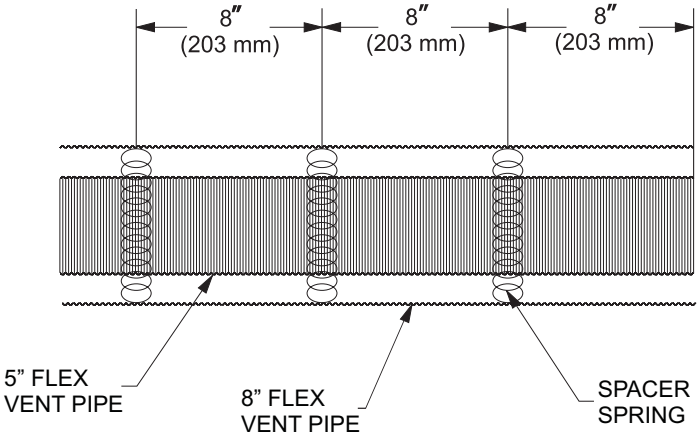

Figure 58

3. Attach a 6-inch piece of hard pipe to raise the connection point above the fireplace.
4. Use existing 8-inch diameter inlet collar to attach outer vent pipe.
5. Install the Wall Firestop/Thimble assembly as required through the wall. Refer to the venting charts in the fireplace manual to determine the proper height and size of the vent opening. The minimum opening should be 10-inches wide by 12-inches high. The minimum combustible clearance from the horizontal vent is 1 inch from sides and bottom, and 3 inches above the vent pipe.
6. In most cases, after determining the length of the vent that is needed, it may be easier to install the flue and outer vent pipes to the Termination Cap first, then from the outside, feed the venting through the wall to the fireplace.
7. If the venting is to long, trim off any excess vent before attaching the vent end connectors.
8. Attach the Termination Cap to the outside of the house.

⚠ CAUTION

Do not use force when installing the Horizontal Vent Termination into the flex venting. Always stretch venting out first, then cut off excess vent material prior to sliding the vent termination into the flue and inlet venting. Forcing the termination cap into the flex venting will deform the flue venting, which will restrict the exhaust gases, and cause improper operation of the fireplace.

fire-parts.com

9. Prior to making the vent connections, apply high temperature sealant (1000°F min.) to the vent connections before securing with the band clamps provided. Note: the flue pipe end without the adapter is to be installed to the Termination Cap.
10. Apply sealant to the outside of the flue pipe adapter and connect to the flex flue pipe. Then insert the adapter into the fireplace flue. Secure flue adapter to the fireplace flue with a minimum of two screws provided. **See Figure 59.**
11. Attach the Outer Vent pipe to the 8-inch diameter collar on the fireplace with a large band clamp provided. Sealant may also be used on the outer vent connections.
12. Check all vent connections for tightness. Make sure horizontal venting has the proper rise and combustible clearances required. Refer to venting charts in fireplace instruction manual.

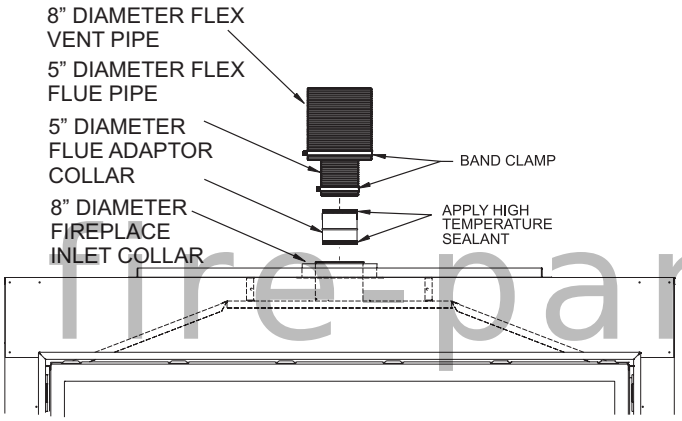

Figure 59

fire-parts.com

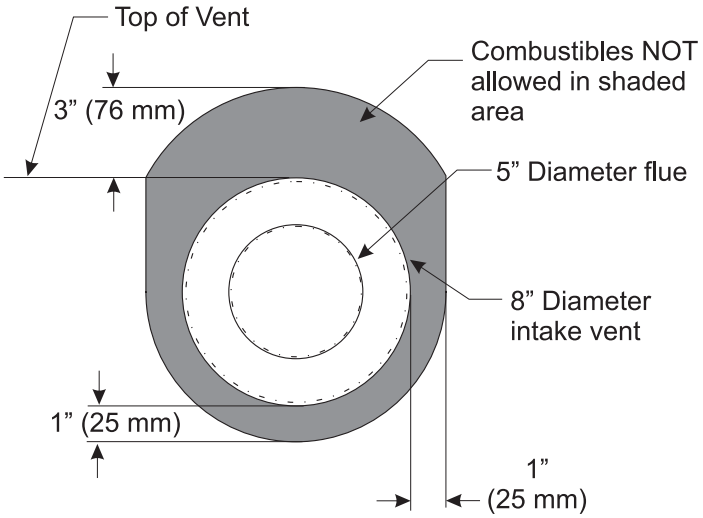

Figure 60

Installing Support Brackets

Install a horizontal pipe support used for each 3 feet of horizontal run to framing members. Allow 3 inch clearance to combustibles above 8-inch diameter pipe and elbows, and 1 inch clearance to both sides and bottom.

Support vertical runs of this vent systems every 4 feet using wall brackets attached to the vent pipe, then secured with nails or screws to structural framing.

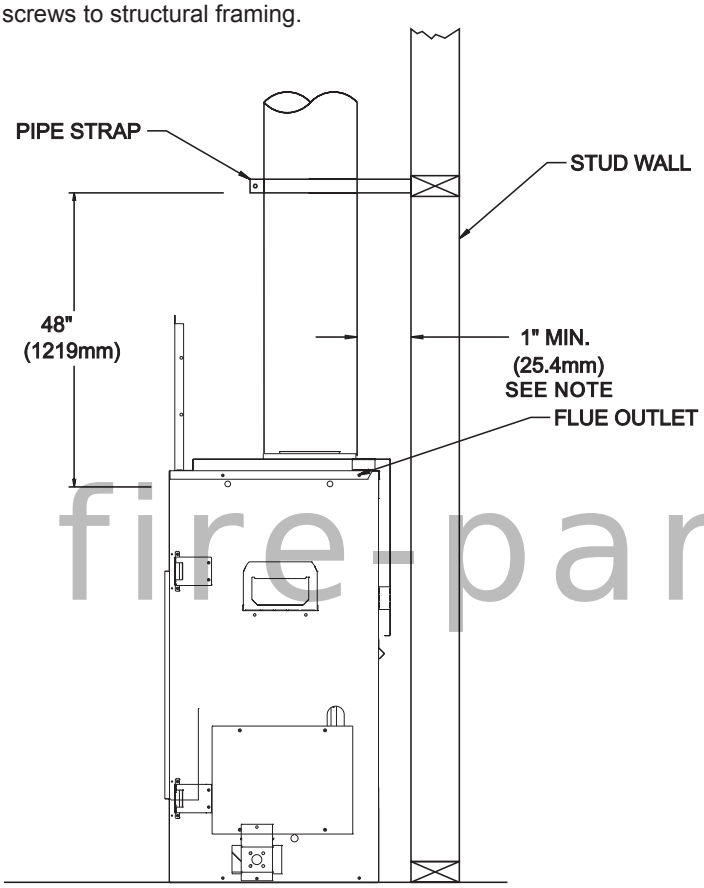

Figure 61

Installing Firestops

Firestops are required for safety whenever the vent system passes through an interior wall, an exterior wall, or a ceiling. These firestops act as a firebreak heat shield and as a means to insure that minimum clearances are maintained to the vent system.

Horizontal Firestops

Horizontal runs in the vent system which pass through either interior or exterior walls, require the use of wall firestops on both sides of the wall through which the vent passes.

Position the firestops on both sides of the framed hole, previously cut. A thimble spacer is included with the fireplace, and must be installed under the inside wall firestop thimble base. See Figure 62. Secure firestop with nails or screws. Continue the vent run through the firestops.

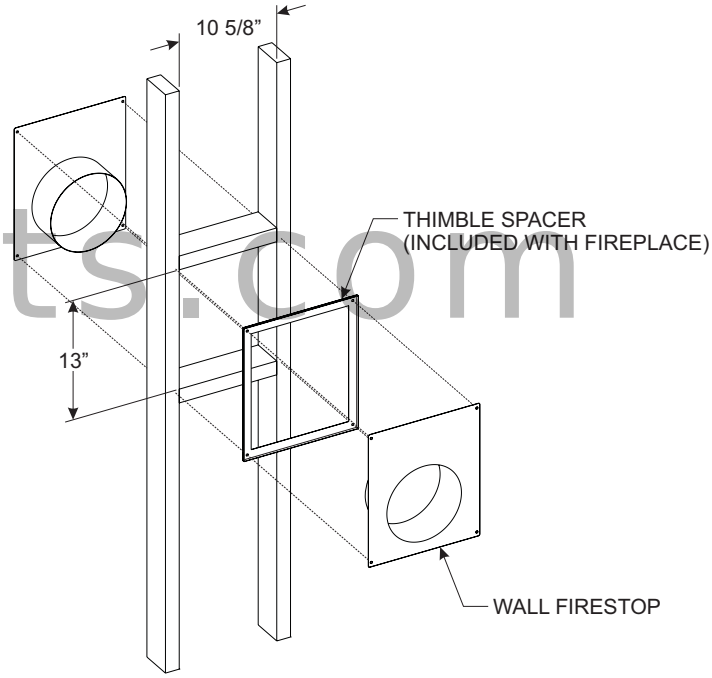

Figure 62

fire-parts.com

Vertical Firestops
Vertical runs of this system which pass through ceilings require the use of ONE ceiling firestop at the hole in each ceiling through which the vent passes.
Position a plumb bob directly over the center of the vertical vent component and mark the ceiling to establish the center point of the vent. Drill a hole or drive a nail through this center point and check the floor above for any obstructions such as wiring or plumbing runs. Reposition the fireplace and vent system, if necessary, to accommodate ceiling joists and/or obstructions.

Cut a 10-5/8 inch x 10-5/8 inch hole through the ceiling, using the center point previously marked. Frame the hole with framing lumber the same size as the ceiling joists. **See Figure 63.** If the area above the ceiling is NOT an attic, position and secure the ceiling firestop on the ceiling side of the previously cut and framed hole. **See Figure 64.**

If the area above the ceiling is an attic, position and secure the firestop on top of the previously framed hole. **See Figure 65.**

NOTE: Remove insulation from the framed area in the attic before installing the firestop and/or vent pipes.

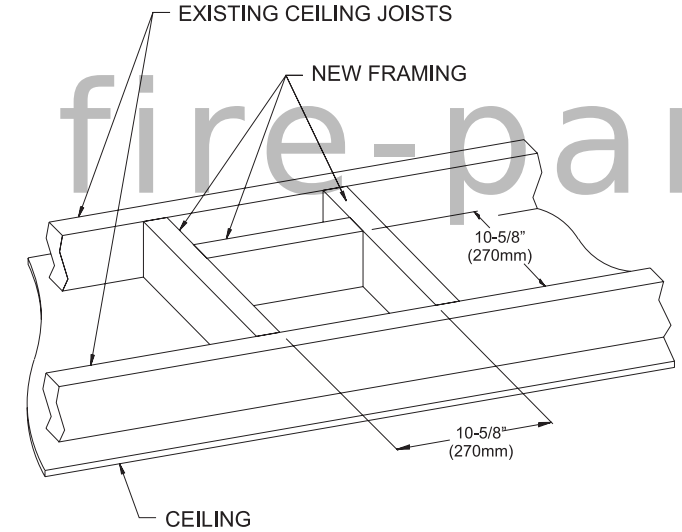

Figure 63

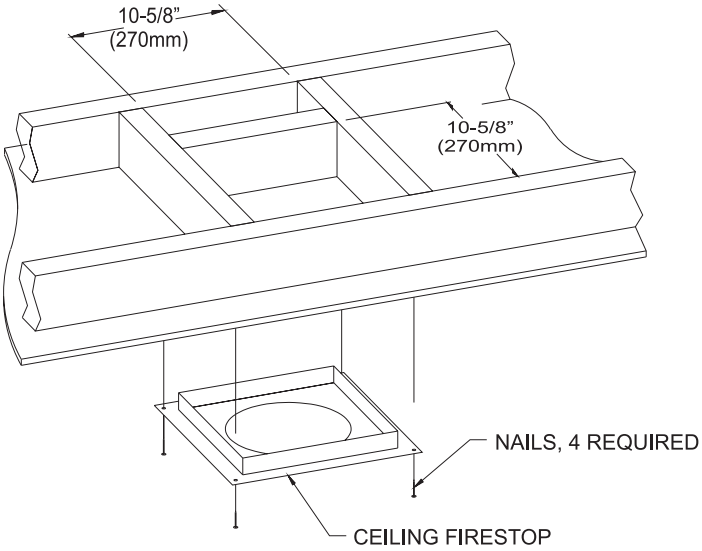

Figure 64

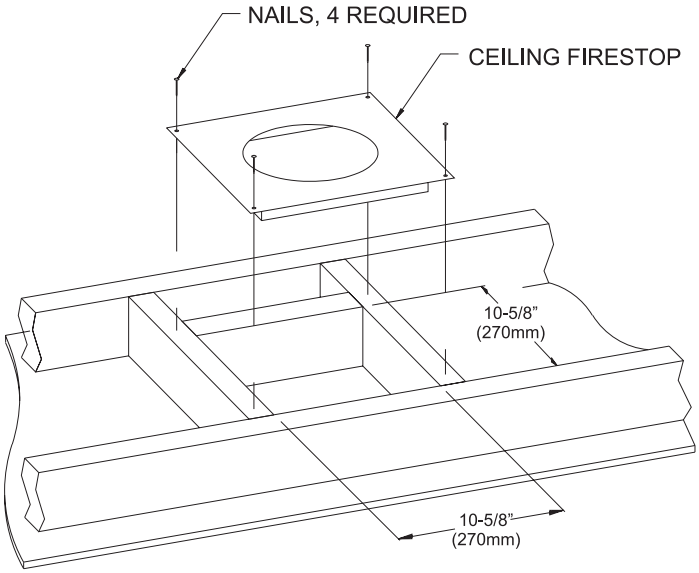

Figure 65

Finishing
Finish the walls with the material of your choice. **Figure 12** on Page 12 shows the minimum vertical and corresponding maximum horizontal dimensions of mantels or other combustible projections above the top front edge of the fireplace.
Only non-combustible materials may be used to cover the black fireplace front.

fire-parts.com

⚠ WARNING

When finishing the fireplace never obstruct or modify the air inlet/outlet louvers in any manner. Provide adequate clearances around air openings into the combustion chamber.

⚠ CAUTION

If the joints between the finished wall and the fireplace surround (top and sides) are sealed, a 300 Degree F minimum sealant material must be used. These joints are not required to be sealed. Only non-combustible material (using 300 Degree F minimum adhesive if needed), can be applied as facing to the fireplace surround.

LINER INSTALLATION

Note: A liner is required for operation of this fireplace. Refer to the instructions that came with your liner for proper installation.

DVP60LPZ - Bronze Ridgeback Liner Kit

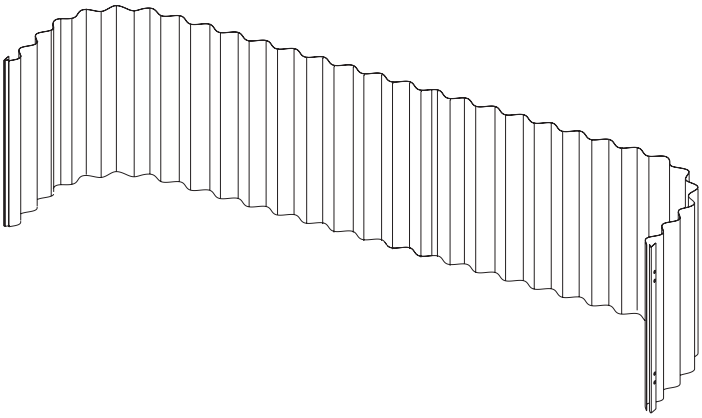

Figure 66

DVP60LKR - Black Porcelain Liner Kit

fire-parts.com

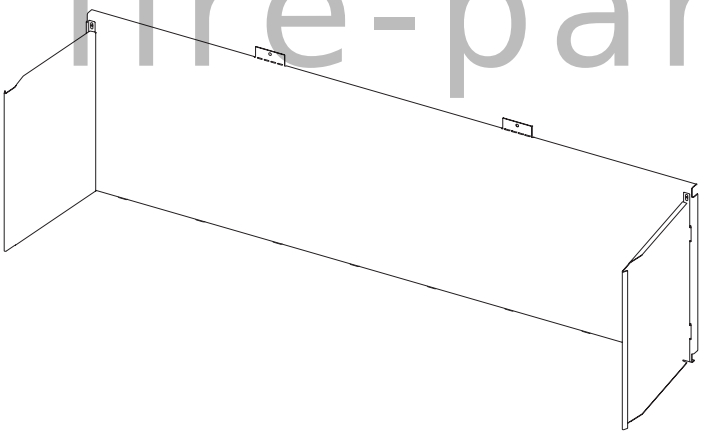

Figure 67

GLASS PLACEMENT

Preparation of fireplace prior to decorative media placement

1. The accent glass panels are wrapped and secured to the burner cover assembly with a cable tie for shipping purposes. Cut the cable tie, then remove and set aside the accent glass panels.
2. If a liner kit has not been installed, STOP and install one before proceeding with media placement.
3. Remove the light cover and verify that all five accent light bulbs are installed in the light bracket. These are located in the reflective light bracket at the front of the firebox. Use gloves or a soft cloth to verify the light bulbs are plugged correctly. Do not handle halogen bulbs with your bare hands. Oils from your skin will cause the bulb to burn out prematurely.
4. Install the two accent glass panels into the metal retainer bracket located above the accent lights. The two glass panels will be placed so they meet together at the center of the bracket.
5. Replace the light cover over the accent lights.
6. If applicable, install Logs and Rock kit.
7. Add the decorative crushed glass media of your choice at this time. Crushed glass may cover the complete burner cover, accent glass panels, and burner screen.

Place crushed glass media over the burner screen in a single layer. Use just enough crushed glass media to mask the burner screen. Additional crushed glass may be placed over the burner cover and accent light glass panels as shown in Figure 68.

fire-parts.com

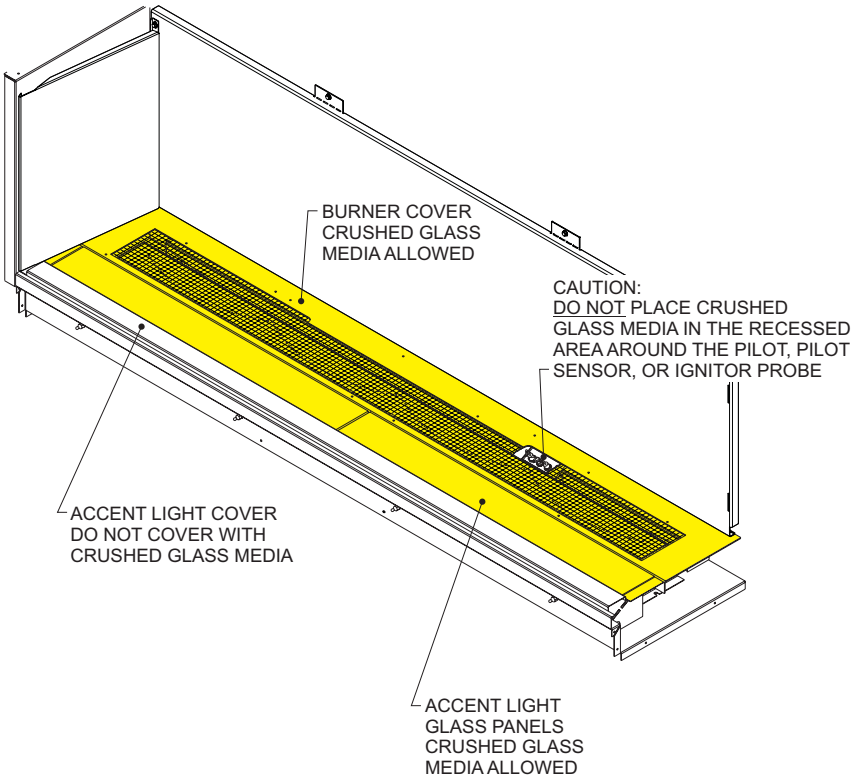

Figure 68

MULTIFUNCTION REMOTE OPERATING INSTRUCTIONS

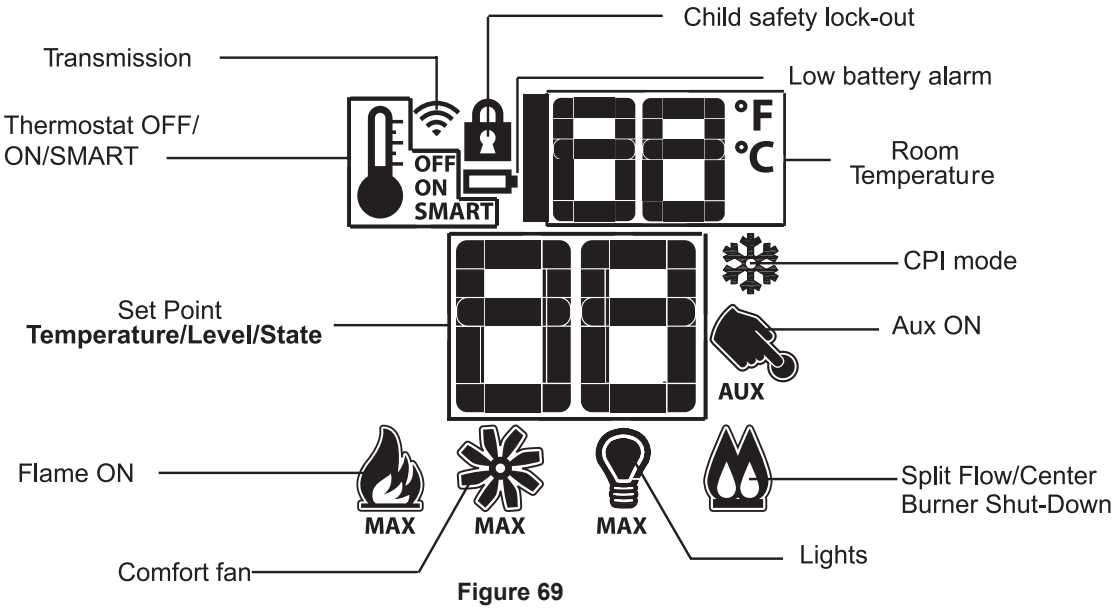

Figure 69

Technical Data	
Remote Control	
Supply voltage	4.5 V (three 1.5 V AAA batteries)
Ambient temperature ratings	0-50°C (32 - 122°F)
Radio frequency	315 MHz

firepart.com

⚠ WARNING

THE TRANSMITTER AND RECEIVER ARE RADIO FREQUENCY DEVICES. PLACING THE RECEIVER IN OR NEAR METAL MAY SEVERELY REDUCE THE SIGNAL RANGE.

⚠ WARNING

TURN OFF THE MAIN GAS SUPPLY AND ELECTRICAL SUPPLY TO THE FIREPLACE DURING INSTALLATION AND/ OR MAINTENANCE OF THE RECEIVER DEVICE.

⚠ WARNING

FIRE HAZARD. CAN CAUSE SEVERE INJURY OR DEATH.
THE RECEIVER CAUSES IGNITION OF THE FIREPLACE. THE FIREPLACE CAN TURN ON SUDDENLY. KEEP AWAY FROM THE FIREPLACE BURNER WHEN OPERATING THE REMOTE SYSTEM OR ACTIVATING MANUAL BYPASS OF THE REMOTE SYSTEM.

⚠ CAUTION

PROPERTY DAMAGE HAZARD.
EXCESSIVE HEAT CAN CAUSE PROPERTY DAMAGE.
THE FIREPLACE CAN STAY LIT FOR MANY HOURS. TURN OFF THE FIREPLACE IF IT IS NOT GOING TO BE ATTENDED FOR ANY LENGTH OF TIME. ALWAYS PLACE THE TRANSMITTER WHERE CHILDREN CAN NOT REACH IT.

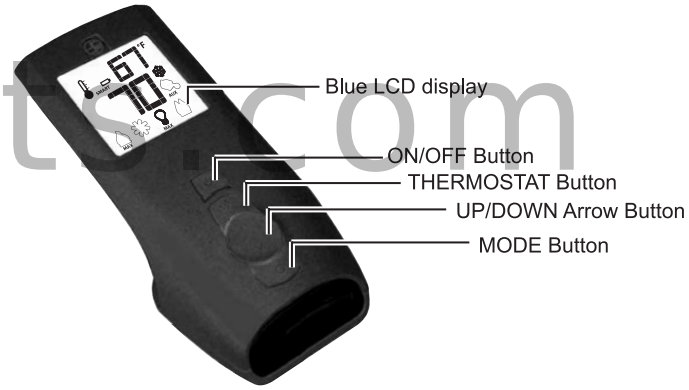

Figure 70

NOTE: This control system includes a Battery Back-up pack that allows the Fireplace to operate in the event of a power outage.
NOTE: The Accent Light and/or Blower features will not operate during a power outage.
NOTE: Replace all Batteries at least once each year, preferably before at the beginning of the season.

⚠ CAUTION

FIRE OR EXPLOSION HAZARD.
CAN CAUSE PROPERTY DAMAGE, SEVER INJURY OR DEATH. DO NOT ATTEMPT TO TAKE APART THE GAS CONTROL OR TO CLEAN IT. IMPROPER ASSEMBLY AND CLEANING CAN CAUSE UNRELIABLE OPERATION.

MULTIFUNCTION REMOTE OPERATING INSTRUCTIONS

Initializing the System for the First Time

1. Remove the wall cover. Remove cover on the wall mounted battery back-up holder. **See Figure 71**. Install the four AA batteries into the wall mounted battery back-up holder then reinstall the cover. **See Figure 72.**
2. Install three AAA batteries into the battery bay located on the base of the transmitter. **See Figure 73.**
3. Set the wall remote slide switch to the REMOTE position. **See Figure 72.**
4. Press and release the SWI button on the wall control with a paper clip and the IFC module will beep three times to indicate the IFC module is ready to synchronize with the transmitter within ten seconds. **See Figure 72.**

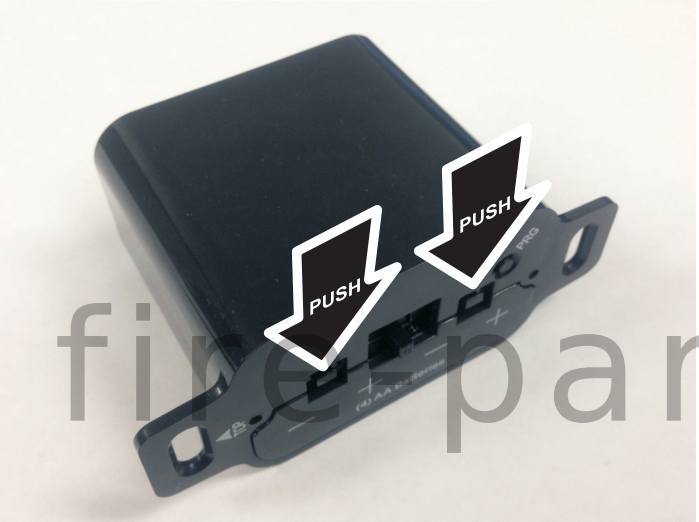

Figure 71

Figure 72

5. With the batteries already installed in the Transmitter, push the On button. The Receiver will beep four times to indicate the Transmitter's command is accepted and sets to the particular code of that Transmitter. The system is now initialized.

Figure 73

fireparts.com

Temperature Indication Display °C or °F

With the system in the OFF position, press the Thermostat Button and the Mode Button at the same time. Look at the LCD screen on the Transmitter to verify that a °C or °F is visible to the right of the Room Temperature display. **See Figures 74 and 75.**

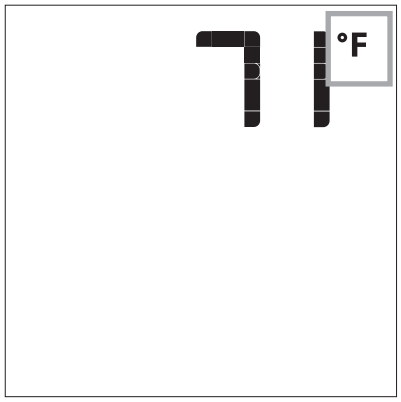

Figure 74

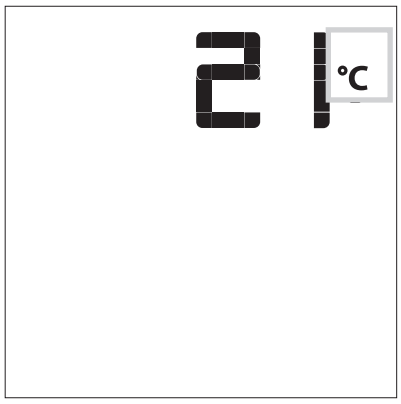

Figure 75

Turn On the Fireplace
With the system OFF, press the ON/OFF Button on the Transmitter. The Transmitter display will show some other active Icons on the screen. At the same time the Receiver will activate the fireplace. A single beep from the Receiver will confirm reception of the command.

Turn OFF the Fireplace
With the system ON, press the ON/OFF Button on the Transmitter. The Transmitter LCD display will only show the room temperature. **See Figure 76.** At the same time the Receiver will turn off the fireplace. A single beep from the Receiver confirms reception of the command.

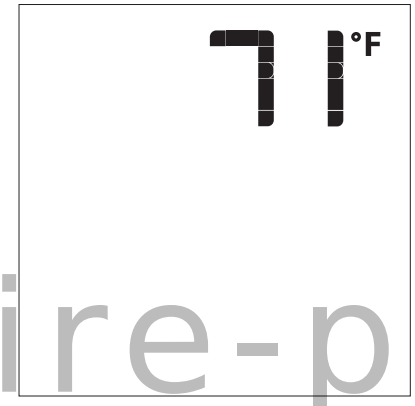

Remote Control Display - Figure 76

fire-parts.com

Remote Flame Control
The Proflame has six flame levels. With the system on, and the flame level at the maximum in the fireplace, pressing the Down Arrow Button once will reduce the flame height by one step until the flame is turned off.
The Up Arrow Button will increase the flame height each time it is pressed. If the Up Arrow Button is pressed while the system is on but the flame is off, the flame will come on in the high position. **See Figures 77 through 80**. A single beep will confirm reception of the command.

Flame Off - Figure 77

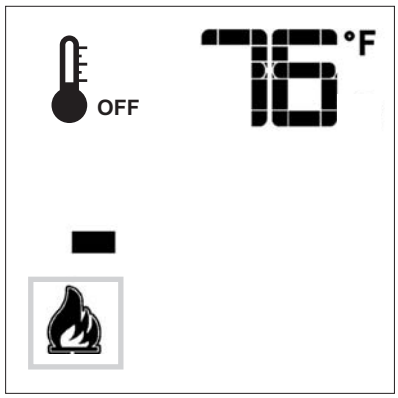

Flame Level 1 - Figure 78

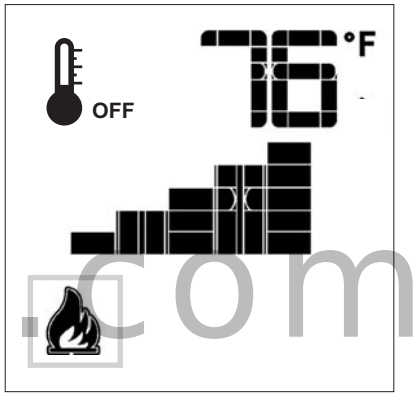

Flame Level 5 - Figure 79

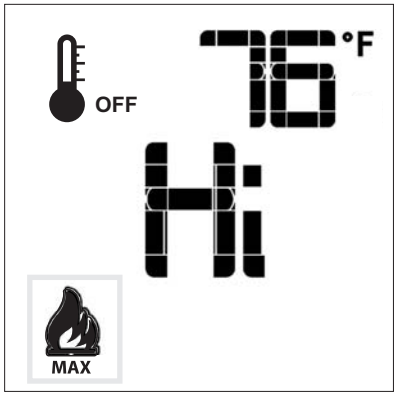

Flame Level Maximum - Figure 80

MULTIFUNCTION REMOTE OPERATING INSTRUCTIONS

The Thermostat Feature may be disabled if desired.
With all the (3) AAA type batteries installed:
1. Take out one AAA battery.
2. While re-inserting the AAA battery, Push and hold down the thermostat button. This will disable the thermostat feature on the transmitter.

Room Thermostat (Transmitter Operation)
The Remote Control can operate as a room thermostat. The thermostat can be set to a desired temperature to control the comfort level in a room. To activate this function, press the Thermostat Button **(Figure 70)**. The LCD display on the Transmitter will change to show that the room thermostat is ON and the set temperature is now displayed. **See Figure 81.** To adjust the set temperature, press the Up or Down Arrow Buttons until the desired set temperature is displayed on the LCD screen of the Transmitter. **See Figure 82.**

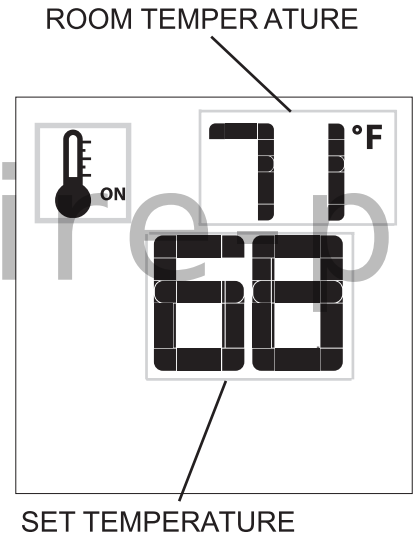

Figure 81

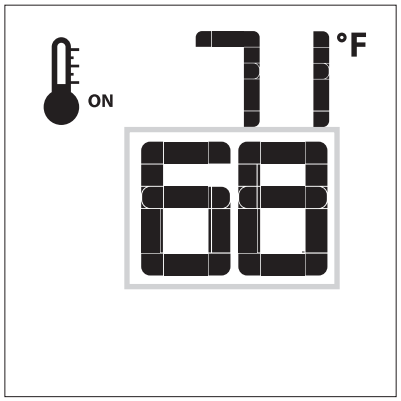

Figure 82

Smart Thermostat (Transmitter Operation)
The Smart Thermostat function adjusts the flame height in accordance to the difference between the set point temperature and the actual room temperatures. As the room temperature gets closer to the set point the Smart Function will modulate the flame down. To activate this function, press the Thermostat Button until the word SMART appears to the right of the temperature bulb graphic. **See Figure 83**. To adjust the set temperature, press the Up or Down Arrow Buttons until the desired set temperature is displayed on the LCD screen of the Transmitter. **See Figure 84.**

Note: When Smart Thermostat is activated, manual flame height adjustment is disabled.

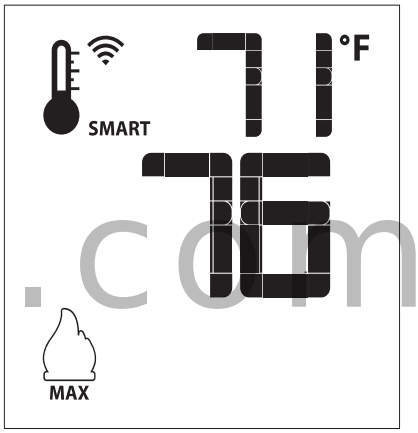

Figure 83

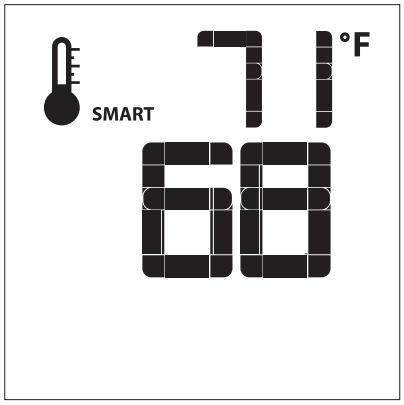

Figure 84

fireparts.com

Blower Control (Fan)
If the fireplace is equipped with a hot air circulating fan, the speed of the fan can be controlled by the Proflame system. The fan speed can be adjusted through six speeds. To activate this function, use the Mode Button **(Figure 70)** to index the fan control icon. **See Figure 85**. Use the Up/Down Arrow Buttons **(Figure 70)** to turn on off or adjust the fan speed. **See Figure 86**. A single beep will confirm reception of the command.

Figure 85

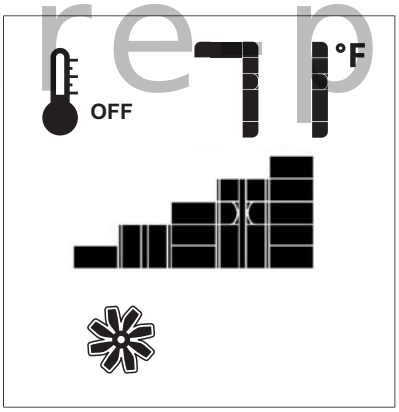

Figure 86

Remote Dimmer Control (Light)
The auxiliary function controls the AUX power outlet by the dimmable light control. To activate this function, use the Mode Button **(Figure 70)** to index to the AUX icon. **See Figures 87 and 88**
The intensity of the output can be adjusted through six levels. Use the Up/Down Arrow Buttons **(Figure 70)** to adjust the output level. A single beep will confirm reception of the command.
Note: This function is available only with the IFC control Module.

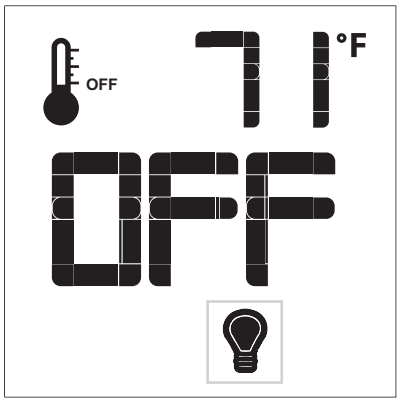

Figure 87

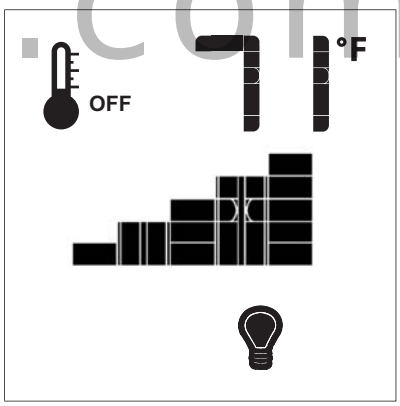

Figure 88

fireparts.com

Split Flow Control (Option not available for the DVLL60BP Series Fireplaces)
The secondary burner is controlled by the split flow. To activate this function use the Mode Button **(Figure 70)** to index to the SPLIT FLOW mode icon. **See Figures 89 and 90**.
Pressing the Up Arrow Button will activate the secondary burner. Pressing the Down Arrow Button will turn the secondary burner off. A single beep will confirm the reception of the command.

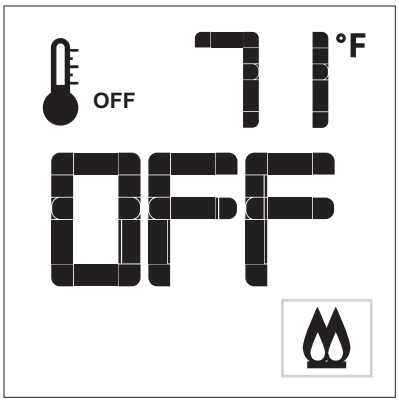

Figure 89

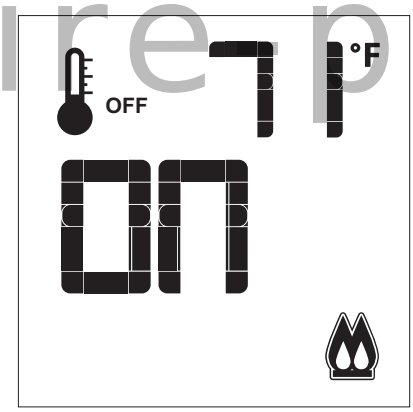

Figure 90

Remote Auxiliary Relay Control (optional with this fireplace)
The auxiliary function controls the AUX relay outlet. To activate this function use the Mode Button (**Figure 70**) to index to the AUX icon (**Figures 91 & 92**). Pressing the Up Arrow Button will activate the outlet. Pressing the Down Arrow Button will turn the outlet off. A single beep will confirm the reception of the command.

Figure 91

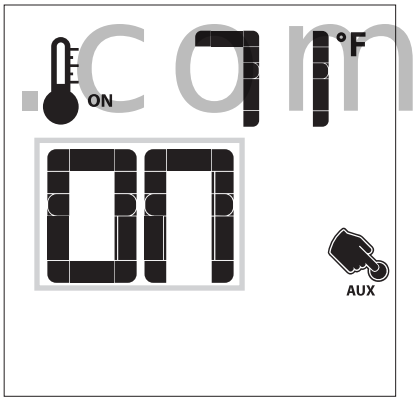

Figure 92

fireparts.com

Continuous Pilot/Intermittent Pilot (CPI/IPI) Selection
With the system in OFF position press the Mode Button **(Figure 70)** to index to the CPI mode icon. **See Figures 93 and 94.** Pressing the Up Arrow Button will activate the CPI. Pressing the Down Arrow Button will return to IPI. A single beep will confirm the reception of the command.

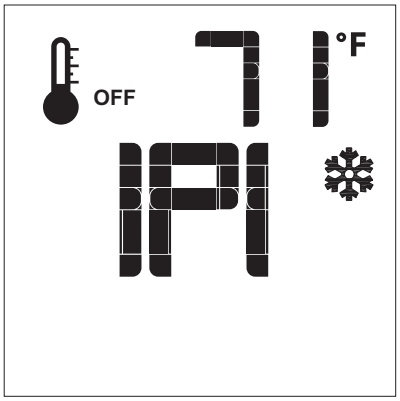

Figure 93

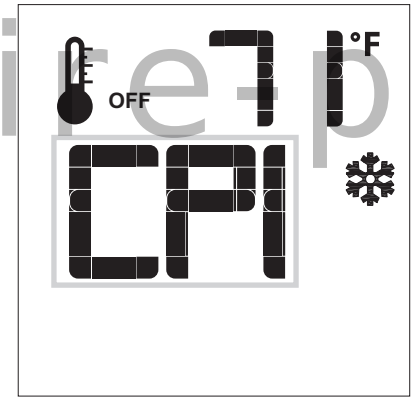

Figure 94

firepartsr.com

Button Lock
This function will lock the Buttons to avoid unsupervised operation.
To activate this function, press the MODE and UP Buttons at the same time. **See Figure 95.**
To deactivate this function, press the MODE and UP Buttons at the same time.

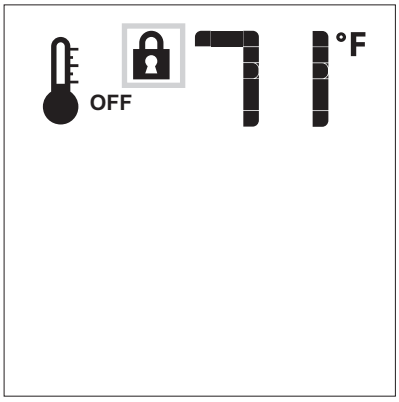

Figure 95

Low Battery Power Detection - Transmitter
The life span of the remote control batteries depends on various factors: quality of the batteries used, the number of ignitions of the fireplace, the number of changes to the room thermostat set point, etc.
When the transmitter batteries are low, an Icon will appear on the LCD display of the transmitter **See Figure 96** before all battery power is lost. When the batteries are replaced this Icon will disappear.

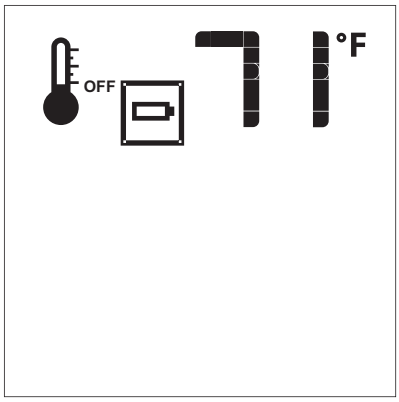

Figure 96

MULTIFUNCTION REMOTE OPERATING INSTRUCTIONS

Using the Fireplace without a Remote Control
The fireplace can be turned ON (HI only) and OFF with the wall switch. The fireplace flame ON/OFF is the only function that will operate; no flame adjustment, light or blower will work when using the wall switch. The wall control switch should be turned OFF when the fireplace is not being used for extended periods of time.

Battery Backup Operation
Install batteries (See initialization sequence on page 69). In case of power loss, the fireplace will switch to battery mode automatically. The fireplace will operate normally without the fan or light control when in battery mode.

Low Battery Detection
When the backup batteries are low, a double-beep will be emitted when the module receives an on/off command. No commands will be accepted until the batteries are replaced or the A/C power is restored.

Lockout State Definition
A lockout state is reached when an ignition error occurs. The lockout state will remain set in memory as long as the power supplies are applied.
This could mean both an anomalous flame detection and/or too many unsuccessful ignition tries.
This state is a safe condition for the fireplace and is entered automatically by the IFC board.
When the IFC board gets into lockout state:

1. both the Pilot and the Main Burner solenoids in the gas valve are de-energized;
2. a diagnostic code is sent through the diagnostic red LED.
3. the IFC board will ignore any burner ignition command and remain in the OFF state unless the unlock command sequence is met.

The causes of lockout must be investigated under safe conditions by the user and/or the service personnel.
To reset the IFC from a lockout state, perform the following procedure:

Turning the system power supplies (to the wall control or remote control) OFF for two or three seconds and then restoring a power supply back on.

The return of the system to normal operation must be checked under safe conditions by the user and/or service personnel.

fire-parts.com

CONTROL SYSTEM TROUBLESHOOTING

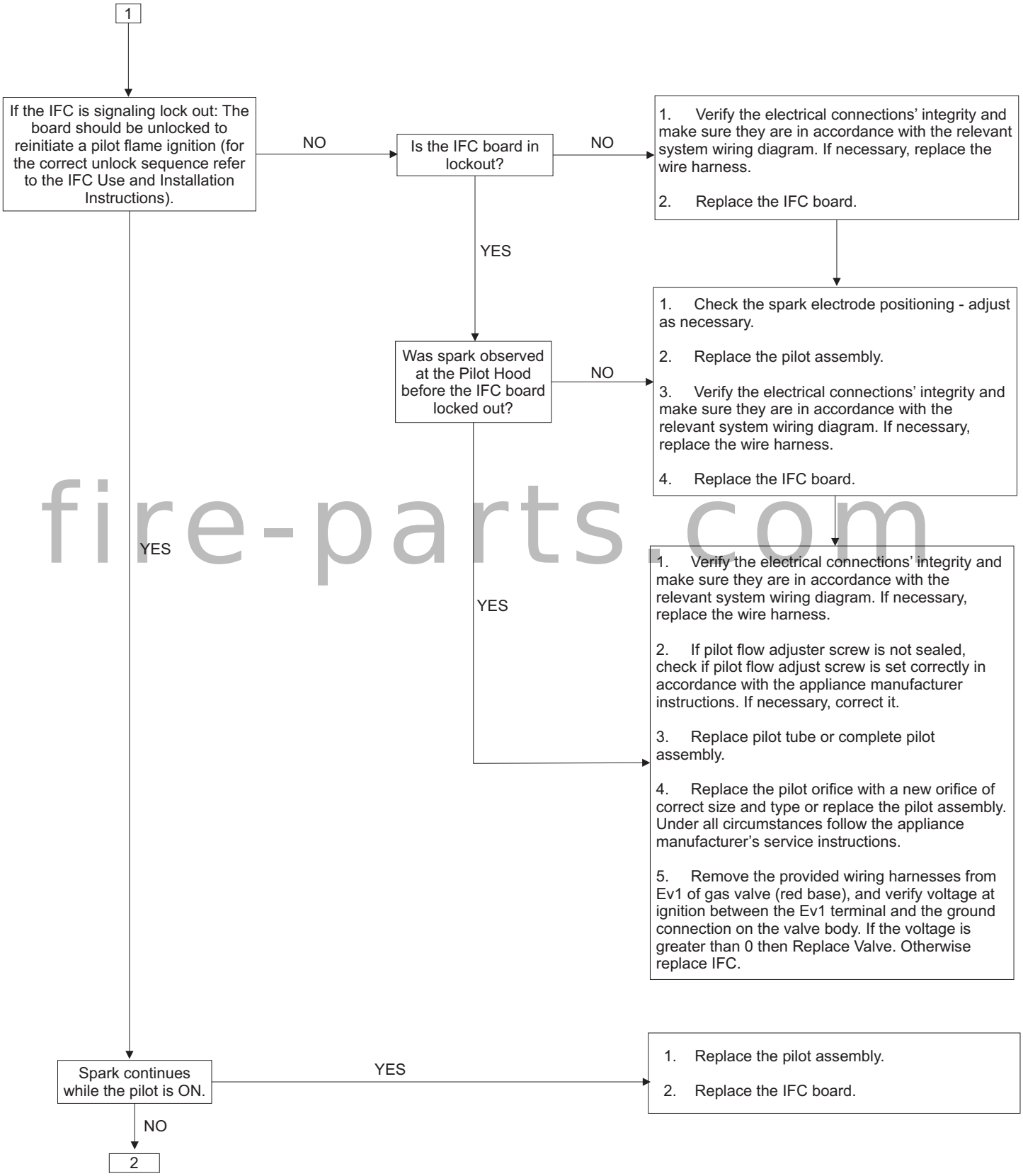

fire-parts.com

CONTROL SYSTEM TROUBLESHOOTING

2

Main burner lights when the pilot only should light.

YES →

1. Replace IFC board.
2. Replace the gas valve.

NO ↓

Pilot holds the flame?

NO →

1. Verify the pilot flame fully engulfs the tip of the sense electrode. If not, replace the pilot assembly.
2. Replace the pilot assembly.
3. Carefully clean the electrical connections of the sense cable and the IFC board sense cable connection.
4. Replace the sense cable, the cable-sense electrode assembly, or the pilot assembly.
5. Verify the pilot is properly grounded.
6. Replace the pilot orifice with a new orifice of correct size and type or replace the pilot assembly.
7. If pilot flow adjuster screw is not sealed, correct it.

YES ↓

Main burner ignites?

NO →

1. Verify the electrical connections' integrity and make sure they are in accordance with the relevant system wiring diagram. If necessary, replace the wire harness.
2. Check if the optional remote transmitter is in "thermostat" or "on" mode and verify there is a call for heat (if using a thermostat remote). Adjust the setting for heat.
3. Verify that the pilot hood is properly fitted and a pilot flame is directed to properly ignite the main appliance burner.
4. Replace the main burner orifice with a new orifice of correct size and type or replace the pilot assembly. Under all circumstances, follow the service instructions.
5. Remove the provided wiring harnesses from EV2 of gas valve (red base) and verify voltage at ignition between the EV1 terminal and the ground connection on the valve body.
   5.1 If the voltage is greater than 0, then replace valve.
   5.2 Or Replace IFC.
6. Check the pressure at the outlet pressure test point out according to the manufacturer's instruction. If not in accordance, replace the gas valve.

YES ↓

Main burner remains ON?

NO →

1. Verify the electrical connections' integrity and make sure they are in accordance with the relevant system wiring diagram. If necessary, replace the wire harness.
2. Check the pressure at the outlet pressure test point out according the manufacturer's instruction. If not in accordance, replace the gas valve.
3. With the system in the OFF position, connect the voltmeter between the EV2 terminal (green base) on the valve and the ground on the valve body.
   Turn the system ON, let pilot light, and observe the following voltage sequence: once the pilot flame is proved, the voltage on EV2 should spike to approx. 5 VdC for approx. 2 sec and then drop to approx. 0.6 VdC continuously.
   3.1 If the sequence is followed, replace the gas valve.
   3.2 If the sequence is not followed, replace the IFC board.

↓

Main burner modulates properly?

→

1. Replace the main burner orifice with a new orifice of correct size (partial blockage possible). Verify that the main burner flame modulates. If it does not modulate, replace the gas valve.
2. Verify that the gas valve outlet pressure limits are in accordance with the manufacturer specifications. If not, replace the gas valve.

fire-parts.com

LIGHTING INSTRUCTIONS

FOR YOUR SAFETY READ BEFORE LIGHTING

⚠ WARNING: IF YOU DO NOT FOLLOW THESE INSTRUCTIONS EXACTLY, A FIRE OR EXPLOSION MAY RESULT CAUSING PROPERTY DAMAGE, PERSONAL INJURY, OR LOSS OF LIFE.

A. This appliance must be lighted with the remote control. When lighting the pilot, follow these instructions exactly.

B. BEFORE LIGHTING, smell around the appliance area for gas. Be sure to smell next to the floor because some gas in heavier than air and will settle on the floor.

WHAT TO DO IF YOU SMELL GAS

- **Do not try to light any appliance.**
- **Do not touch any electrical switch.**
- **Do not use any phone in your building.**
- **Immediately call your gas supplier from a neighbor's phone. Follow the gas supplier's instructions. If you can not reach your gas supplier, call the fire department.**

C. Use only the remote control to operate the valve. Never use tools. If valve does not operate, don't try to repair it, call a qualified service technician. Force or attempted repair may result in a fire or explosion.

D. Do not use this appliance if any part has been underwater. Immediately call a qualified service technician to inspect the appliance and to replace any part of the control system and any gas control which has been underwater.

fire-parts.com

LIGHTING INSTRUCTIONS

1. **STOP! Read the safety information above.**
2. **Turn OFF electric power to the appliance.**
3. **Turn gas cock counterclockwise ↶ to ON position.**
4. **Wait ten minutes to clear out any gas. Then smell for gas, including near the floor. If you smell gas, STOP! Follow B in the safety information above on this label. If you do not smell gas, go to the next step.**
5. **Turn ON electric power to the appliance.**
6. **Using the remote control, turn main flame to ON. Refer to the Multifunction Remote Operating Instructions for more information. If the pilot does not light within 60 seconds, stop and go back to Step 4.**
7. **Refer to remote control instructions for detailed information, control features, and operation. Note: Refer to Multifunction Remote operating instructions for selection of continuous standing pilot mode or intermittent pilot mode. If the pilot or burner does not stay lit (in the standing pilot mode), stop and immediately call a qualified service technician or gas supplier.**
8. **If the burner or pilot does not operate properly after several tries, turn the gas control knob clockwise ↷ to OFF and call your service technician or gas supplier.**
9. **Operation of the gas valve, blower, and/or optional light must be controlled by using the hand held remote control. Refer to remote instructions for detailed operation information.**

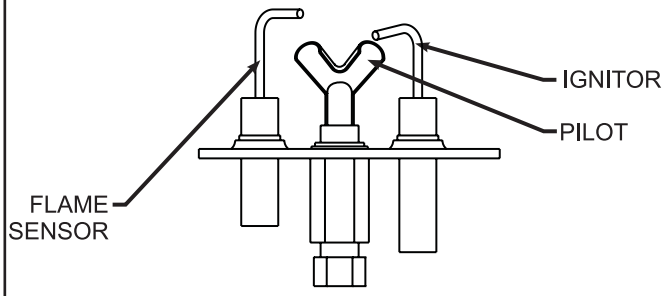

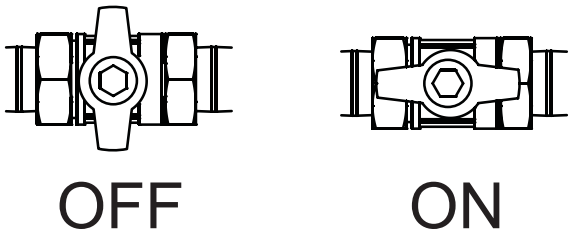

TO TURN OFF GAS TO APPLIANCE

1. **Turn off all electric power to the appliance if service is to be performed (if applicable).**
2. **Locate On/Off gas cock and turn clockwise to ↷ OFF. Do not force.**

This page intentionally blank.

fire-parts.com

PARTS VIEW

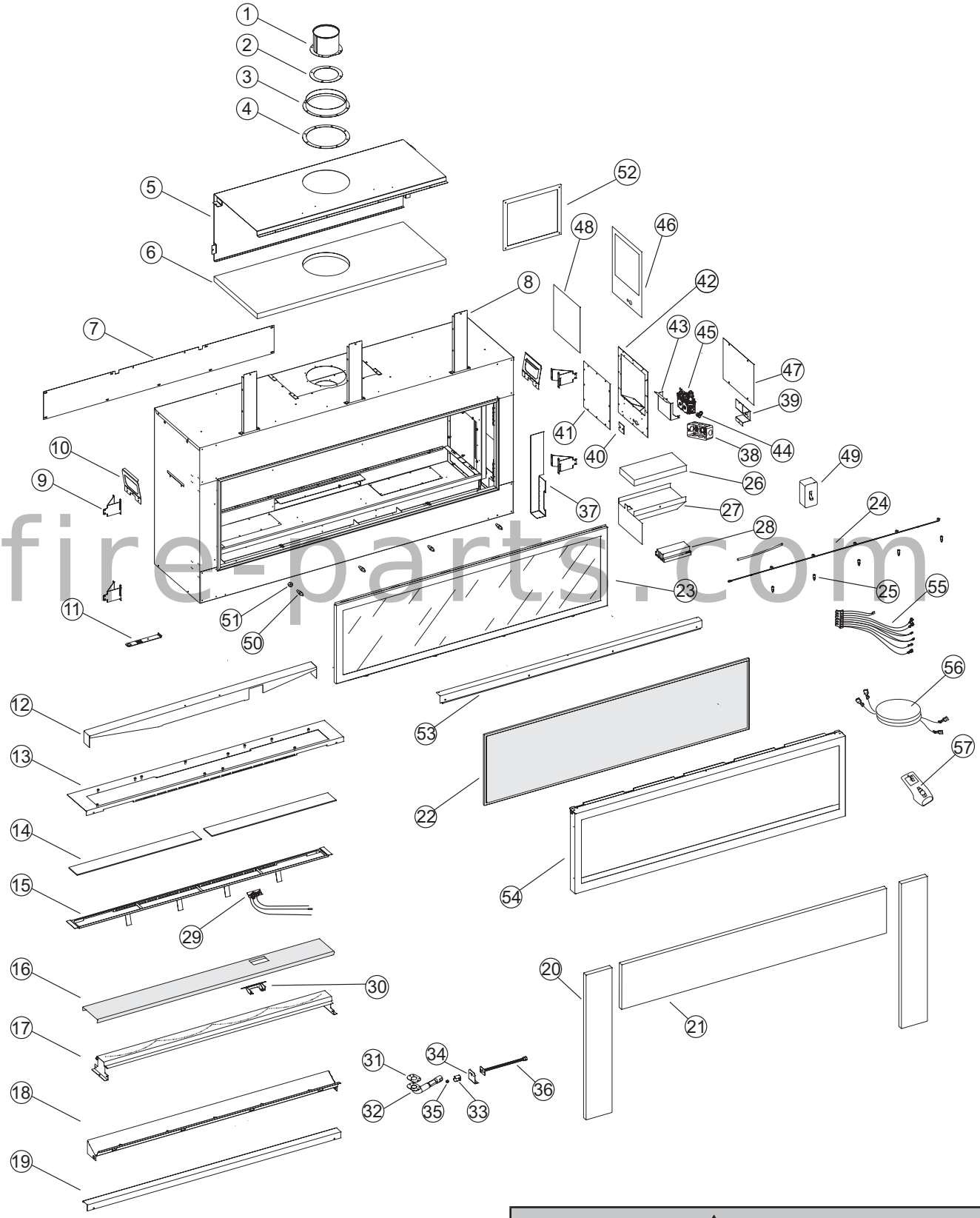

fire-parts.com

⚠ WARNING

Failure to position the parts in accordance with these diagrams or failure to use only parts specifically approved with this fireplace may result in property damage or personal injury.

PARTS LIST

Index Number	Part Number	Description
1	30975	Flue Outlet Assembly
2	M170	Gasket, Flue Outlet
3	R7567	Inlet Vent Adaptor - 8in
4	R7573	Gasket - Inlet Vent
5	34431	Rear Heat Shield
6	R11963	Insulation - Top
7	34400	Rear Access Plate
8	33553	Middle Mount Bracket (3 Required)
9	28450	Nailing Flange (4 Required)
10	34360	Handle
11	35978	Door Latch Tool
12	35531	Rear Baffle
13	34423	Burner Cover Plate
14	R11967	Accent Glass (2 required)
15	34424	Glass Support
16	35658	Burner Screen
17	34426	Burner Assembly Weldment
18	34415	Bracket - Light
19	34414	Cover - Light
20	35672	Non-combustible Board - Side (2 Required)
21	35671	Non-combustible Board - Top
22	Q0024	Barrier Screen
23	35661	Glass Door Assembly
24	R11888	Light Socket Assembly
25	R10928	Light Bulb - 35W, GY6.35 Base, T3 (35W Max)
26	R12081	Insulation - 1x6x12
27	35498	Control Module Shield
28	R11523	Control Module, Proflame II
29	R10914	Pilot - NAT

Index Number	Part Number	Description
29	R10918	Pilot - LP
30	34425	Pilot Bracket
31	R11977	Gasket - Venturi
32	R11978	Venturi Tube - 90 Degree
33	R7624	Air Shutter
34	35532	Bracket, Orifice Holder
35	P280	Orifice #29 - Nat
35	P300	Orifice #48 - LP
36	R10915	Orifice Holder - Flexline
37	35499	Block Off Panel
38	R3490	Junction Box
39	27730	Junction Box Mount Bracket
40	35530	Bracket - Gas Line Seal
41	34418	Control Cover - Inner
42	34419	Control Plate
43	34421	Valve Bracket
44	R10882	Fitting, Inlet 90
45	R11233	Valve - Nat
45	R11234	Valve - LP
46	R12085	Gasket - Control Plate
47	34395	Outer Access Panel
48	R12085	Gasket, Control Plate
49	R11584	Wall Control with Battery Back-Up
50	R8902	Stud, Spherical (4 Required)
51	R8866	Nut, 6mm Stainless Steel
52	33331	Thimble Spacer
53	35529	Bracket, Screen Frame
54	35528	Screen Frame
55	R11524	Wire Harness, Control Module
56	R11552	Wire Assembly, Module to Interface
57	R11522	Remote Transmitter

NS - Not Shown

fire-parts.com

COMPONENT WIRING DIAGRAM

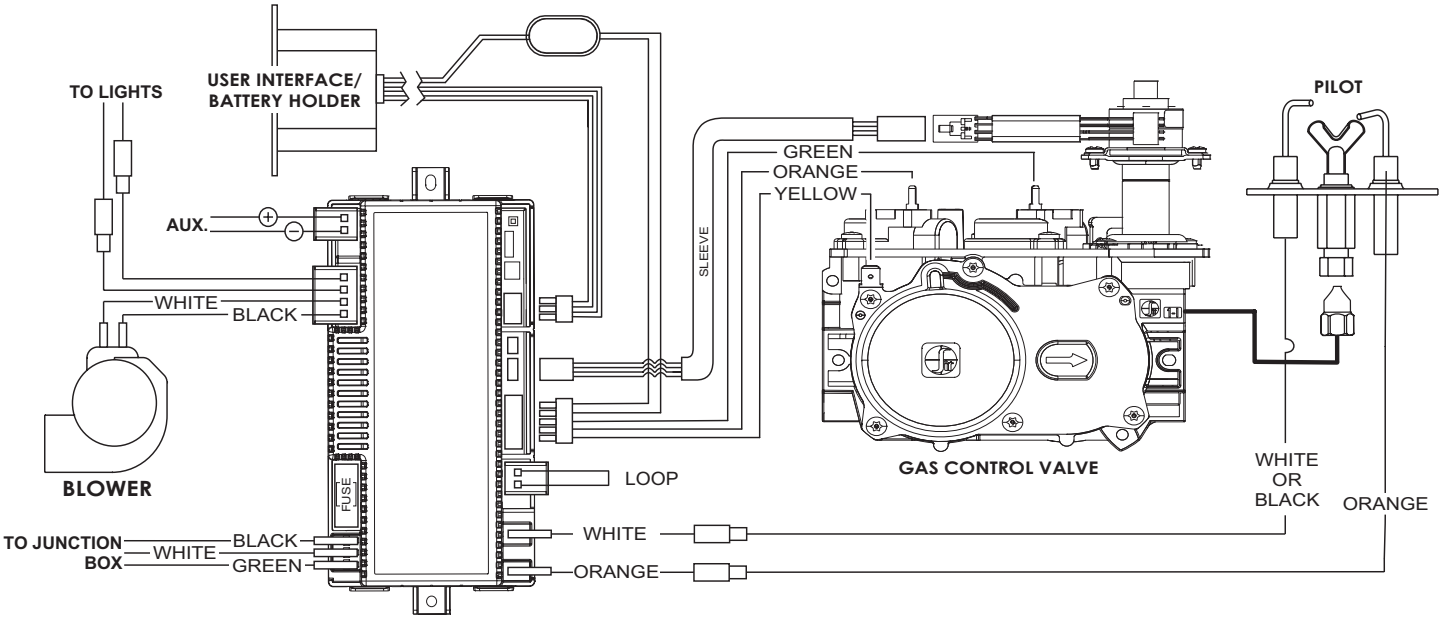

fire-parts.com

If any of the original wire as supplied with this fireplace must be replaced, it must be replaced with equivalent gauge and temperature rated wire.

This fireplace is only for use with the type of gas indicated on the rating plate and may be installed in an aftermarket, permanently located, manufactured (mobile) home where not prohibited by local codes. This fireplace is not convertible for use with other gases, unless a certified kit is used.

⚠ WARNING

Electrical Grounding Instructions

This fireplace is equipped with a three-prong grounding plug for your protection against shock hazard and should be plugged directly into a properly grounded three-prong receptacle. Do not cut or remove the grounding prong from this plug.

⚠ CAUTION

Label all wires prior to disconnection when servicing controls. Wiring errors can cause improper and dangerous operation.

⚠ CAUTION

Do not operate the fireplace with glass panel removed, cracked or broken. Replacement of the panel should be done by a licensed qualified service person.

⚠ WARNING

Improper installation, adjustment, alteration, service or maintenance can cause property damage, personal injury or loss of life. Installation and service must be performed by a qualified installer, service agency or the gas supplier.

Verify proper operation after servicing.

Removing the Barrier Screen
Lift the barrier up approximately 1/4in with one hand under the lower barrier frame edge to disengage the lower flange. Grasp the top of the barrier and pull forward to disengage it. Remove the barrier by pulling straight forward.

Removing the Glass Door Assembly
Locate the glass door tool (secured to the top of the fireplace for shipping). Use the tool as a lever to release the bottom of the glass door as shown in Figure 97.

Note: The glass door is secured to the top of the firebox with tabs that allow the glass door to pivot outward at the bottom. The bottom of the door frame engages into the four bullet type retainers.
Pivot the glass door out until the bottom of the door is about 6 to 8 inches from the firebox face, then lift upward on the door assembly to disengage the top of the door from the tab retainers on top of the firebox. See Figure 97.

⚠ CAUTION

The glass door is wide and heavy and can be difficult to install or remove by a single person. It is recommended that two people remove the glass door.

fire-parts.com

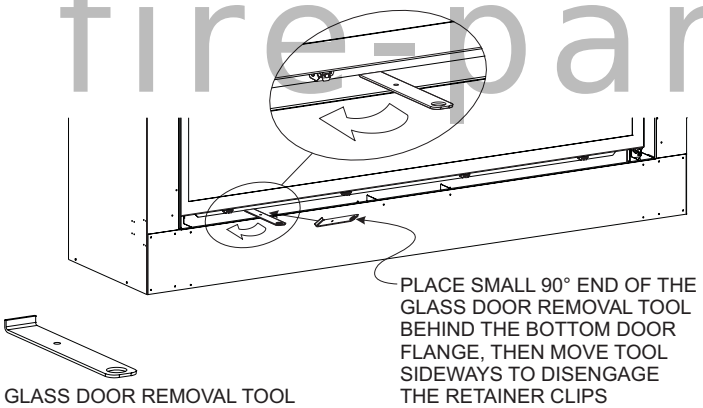

Figure 97

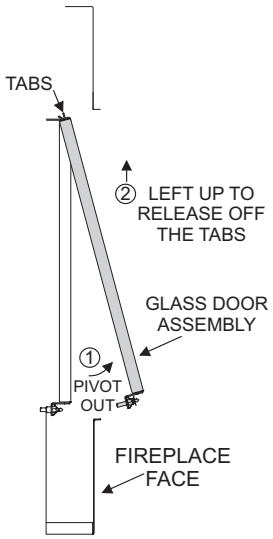

Figure 98

Wiring
If any of the original wire supplied with this unit must be replaced, it must be replace with 18 GA. 150°C wire or its equivalent.

Replacing the Light Bulbs
(Bulb Type: 20V 35W 6.35mm Base)

1. Remove the barrier and the glass door assemblies.
2. Lift the light access cover up and out of the firebox. **See Figure 99.**
3. Remove the bulb(s) to be replaced. **See Figure 100.**
4. Wear gloves or use a clean cloth while handling bulbs or bulb lifespan may be decreased.

Figure 99

Figure 100

Gas Valve and Control Access Instructions

⚠ CAUTION

Sharp Edges! Use gloves and eye protection when servicing the fireplace controls.

***NOTICE*: To service or inspect the gas valve and control system after the fireplace has been installed, or if there is no right side outer accessibility, follow these steps for servicing the fireplace gas control valve.**

Accessing the Gas Valve

Always turn off gas and electrical supply to the fireplace before servicing the controls.

1. Remove the barrier screen and glass door assemblies and set them aside in a safe location.
2. It is not necessary to remove decorative glass media from the burner cover or accent glass panels to gain access to the valve compartment.
3. Remove the front light cover. Lift the cover up and out of the fireplace and set aside in a safe location.

Figure 101

4. If the Logs and Rock kit or the Ridgeback Liner is installed, these must be removed from the fireplace. Refer to the instructions supplied with these options for removal and installation. If the porcelain liner is installed, only the right side liner must be removed. Remove the 5/16in hex-head screw at the top rear of the right side panel. Pull forward on the right side liner to release it from the front retainer bracket and set aside in a safe location.
5. Remove the twelve 5/16in hex-head screws that secure the access cover plate on the right side of the firebox. See Figure 102.

Figure 101

6. The gas valve is now accessible for checking inlet and outlet gas pressures, flex line connections, and wiring to the valve. See Figure 103. Figure 104 shows the inlet and outlet gas test ports.

fire-parts.com

Figure 103

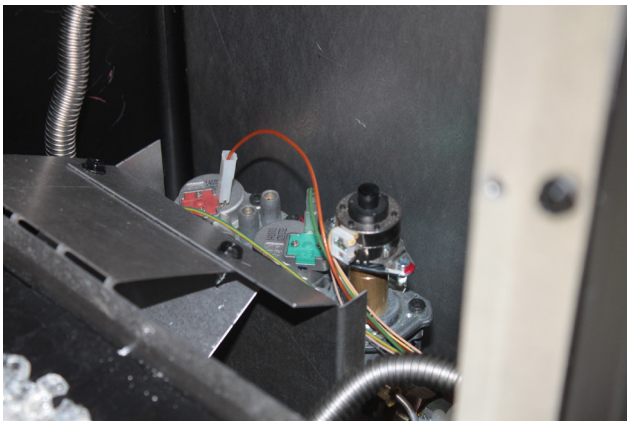

Figure 104

7. To replace of the gas valve by removing the two 5/16in hex-head screws on top of the gas control bracket. The gas valve and bracket can be lifted up to gain access to the flex line connections.

Accessing the Control Module

Always turn off gas and electrical supply to the fireplace before servicing the controls.

1. Remove the barrier screen and glass door assemblies, and set them aside in a safe location.
2. It is not necessary to remove decorative glass media from the burner cover or accent glass panels to gain access to the control module.
3. The control module is in the lower front corner of the fireplace bottom. It is secured to the fireplace with Velcro. The gas control and accent light wiring is routed through the lower right side opening to the gas valve and accent light wire connections in the firebox. The 120V power cord is routed through the lower right side opening and plugged into the Junction Box receptacle. See Figure 105.

Figure 105

MAINTENANCE

Maintenance frequency must be determined individually for each application. Some considerations are:

- Exposure to water, dirt, chemicals and heat can damage the gas control and shut down the control system.
- Cycling frequency. Fireplaces that may cycle 20,000 times annually should be checked monthly.
- Intermittent use. Fireplaces that are used seasonally should be checked before shutdown and again before the next use.
- Dusty, wet or corrosive environment. Because these environments can cause the gas control to deteriorate more rapidly, the system should be checked more often.
- Any control should be replaced if it does not perform properly on checkout or service. In addition, replace any module if it is wet or looks like it has been wet.

SERVICE

Do not disassemble the gas control; it contains non-replaceable components. Attempted disassembly or repair can damage the control.

Exactly follow the warnings and the lighting instructions.

1. Before lighting, smell around the fireplace area for gas. If the fireplace uses LP (bottled) gas, be sure to smell next to the floor because LP gas is heavier than air. If you smell gas, immediately shut off the manual valve in the gas piping to the fireplace or on LP at the tank. Do not try to light any appliance. Do not touch any electrical switch or use the phone. Leave the building and call your gas supplier. If your gas supplier cannot be reached, call the fire department.
2. The gas control must be replaced if it has been flooded with water. Call a qualified service technician.
3. The gas control is a safety device. It must be replaced in case of any physical damage such as bent terminals, missing parts, stripped threads, or evidence of exposure to excessive heat.

Follow the operating instructions provided by the manufacturer of your appliance.

NOTE
It is normal for fireplaces fabricated of steel to give off some expansion and/or contraction noise during the start up or cool down cycle. Similar noises are found with your furnace heat exchanger or car engine. **It is normal for your gas fireplace to give off some odor the first time it is burned. This is due to the curing of the paint and oil from the manufacturing process.** **Please ensure that your room is well ventilated - open a window.**

fireparts.com

Burn your fireplace for at least one hour the first time you use it. If optional fan kit has been installed, place fan in the OFF position during this time.

IMPORTANT: Turn off gas before servicing fireplace. Have a qualified service person perform these check-ups once a year preferably before the using of the fireplace.

- **Clean Burner and Control Compartment**
  Keep the control compartment and burner area clean by vacuuming or brushing at least twice a year.

Cleaning Procedure

1. Turn off fireplace.
2. Remove the barrier screen and glass door assembly. See Glass Door Removal.
3. Remove decorative media (a clean portable shop-vac is recommended).
4. Vacuum burner cover and burner screen areas. The control module located in the bottom front corner can also be vacuumed off.
5. Replace decorative media.
6. Reinstall the glass door and barrier screen.
7. Ignite fireplace. See Lighting Instructions.
8. If flame appears abnormal, call a service person.

- **Check Vent System**
  The fireplace and venting system should be inspected before initial use and at least annually by a qualified service person. Inspect the external vent cap on a regular basis to make sure that no debris is interfering with the air flow.

Glass Cleaning
Clean the glass before use and two or three times each heating season. During start-up condensation (which is normal) forms on the inside of the glass and causes lint, dust and other airborne particles to cling to the glass surface. Also initial paint curing may deposit a slight film on the glass. Use a non-abrasive household cleaner and warm water (we recommend gas fireplace glass cleaner).

General Glass Information

⚠ WARNING
Do not operate fireplace with the glass front removed, cracked or broken.

Only glass approved for use by the manufacturer in fireplace may be used for replacement. The glass replacement should be done by a licensed or qualified service person.

⚠ WARNING
1. The use of substitute glass will void all product warranties. 2. Care must be taken to avoid breakage of the glass. 3. Under no circumstances should this fireplace be operated without the glass front or with a broken glass front. Replacement of the glass (with gasket) as supplied by the manufacturer should be done by a qualified service person. 4. Do not abuse the glass by striking or hitting it.

⚠ WARNING
Do not use Ammonia based or abrasive cleaners on glass. Do not attempt to clean glass when glass is hot.

Glass Door and Barrier Screen Removal and Replacement
Refer to page 53 for removal of the barrier screen and glass door assemblies.
Refer to the Parts View and Parts List on pages 50 and 51 to identify replacement parts such as the barrier screen and glass door assemblies.

Glass Door Installation
Refer to Figure 98 to install the glass door assembly. Because of the width of the door assembly, it is recommended that two people install it. Hold the door at an angle so the bottom is about 8 inches from the fireplace face. Engage the top slots in to door frame with the tabs located at the top of the firebox. Gently pivot the door inward to align the four bullet catches across the bottom of the door frame. Once the bullet pins are aligned with the spring catches on the door frame, push the bottom of the door inward to engage the spring catches with the bullet pins.

Barrier Installation
The barrier screen assembly is installed onto the glass door assembly without fasteners. The top flange of the barrier engages the top of the door frame and the bottom flange. The bottom flange on the barrier will be inserted between the glass door frame across the bottom. Adjust the barrier left to right to center it.

fireparts.com

IMPORTANT SAFETY INFORMATION

⚠ WARNING

Read and follow these safety precautions prior to operating this fireplace. Failure to follow these precautions may result in death, injury, or property damage.

Before enclosing the vent pipe assembly, operate the fireplace to ensure it is venting properly.

⚠ WARNING

DO NOT OPERATE THIS FIREPLACE WITHOUT GLASS FRONT PANEL INSTALLED.

- If this fireplace is installed directly on carpeting, tile or other combustible material other than wood flooring the fireplace shall be installed on a metal or wood panel extending the full width and depth of the fireplace.
  The base referred to above does not mean the fireproof base as used on wood stoves. The protection is for rugs that are extremely thick and light colored tile.
- Children and adults should be alerted to the hazards of high surface temperatures and should stay away to avoid burns or clothing ignition.
- Young children should be carefully supervised when they are in the same room as the fireplace.
- Clothing or other flammable material should not be placed on or near the fireplace.
- Adequate accessibility clearances for servicing and proper operation.
- This fireplace must not share or be connected to a flue serving a separate solid-fuel burning fireplace.
- Keep the area around your fireplace clear of combustible materials, gasoline and other flammable vapor and liquids.
- **Under no circumstances** should any solid fuels (wood, coal, paper or cardboard etc.) be used in this fireplace.
- The flow of combustion and ventilation air must not be obstructed in any way.
- Due to high temperatures, the fireplace should be located out of traffic and away from furniture and draperies.
- The glass front or any part removed for servicing the fireplace must be replaced prior to operating the fireplace. Work should be done by a qualified service person.
- Any safety screen or guard removed for servicing the fireplace must be replaced prior to operating the fireplace.
- Keep burner and control compartment clean.
- Vent cap is **hot** while fireplace is in operation and some time afterward.
- Installation and repair should be done by a **QUALIFIED SERVICE PERSON.** The fireplace should be inspected before use and at least annually by a qualified service person. More frequent cleaning may be required due to excessive lint from carpeting, bedding materials, etc. It is imperative that control compartments, burners and circulating air passageways of the fireplace be kept clean.

⚠ CAUTION

If the glass is cracked or damaged in any way, it should be replaced only with a complete glass frame assembly from Empire. See parts list on Pages 50 and 51 for ordering.

- **DO NOT** put anything around the fireplace that will obstruct the flow of ventilation air.
- **DO NOT** use this fireplace if any part has been under water. Immediately call a qualified service technician to inspect the fireplace and to replace any part of the control system and any gas control which has been under water.
- DO keep the fireplace area clear and free from combustible material, gasoline and other flammable vapors and liquids.
- DO examine venting system periodically and replace damaged parts.
- DO make a periodic visual check of pilot and burners. Clean and replace damaged parts.
- Young children should be carefully supervised when they are in the same room as the fireplace. Toddlers, young children, and others may be susceptible to accidental contact burns. A physical barrier is recommended if there are at-risk individuals in the house. To restrict access to a fireplace or stove, install an adjustable safety gate to keep toddlers young children, and other at-risk individuals out of the room and away from hot surfaces.
- A barrier designed to reduce the risk of burns from the hot viewing glass is provided with this fireplace and shall be installed for the protection of children and other at-risk individuals.
- If the barrier becomes damaged, the barrier shall be replaced with the manufacturer's barrier for this fireplace.
- Any safety screen, guard, or barrier removed for servicing an fireplace must be replaced prior to operating the fireplace.

fire-parts.com

Combustible Material

Do not attach combustible material to the mantel of your fireplace. This is a fire hazard. No greeting card, stockings or ornamentation of any type should be placed on or attached to the fireplace. This is a heating appliance. The flow of heat can ignite combustibles.

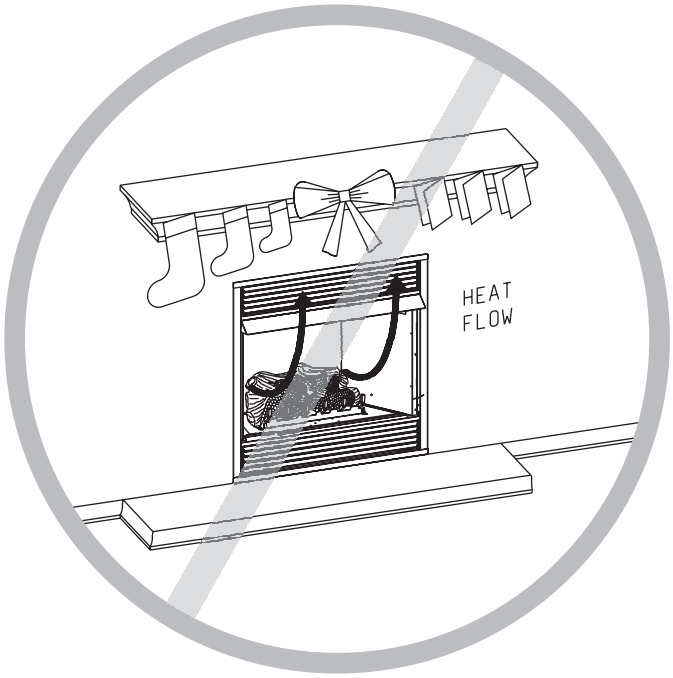

Figure 106

SAFETY INFORMATION FOR USERS OF LP GAS

Propane (LP-Gas) is a flammable gas which can cause fires and explosions. In its natural state, propane is odorless and colorless. You may not know all the following safety precautions which can protect both you and your family from an accident. Read them carefully now, then review them point by point with the members of your household. Someday when there may not be a minute to lose, everyone's safety will depend on knowing exactly what to do. If, after reading the following information, you feel you still need more information, please contact your gas supplier.

LP-GAS WARNING ODOR

If a gas leak happens, you should be able to smell the gas because of the odorant put in the LP-Gas. That's your signal to go into immediate action!

- Do not operate electric switches, light matches, use your phone. Do not do anything that could ignite the gas.
- Get everyone out of the building, vehicle, trailer, or area. Do that IMMEDIATELY.
- Close all gas tank or cylinder supply valves.
- LP-Gas is heavier than air and may settle in low areas such as basements. When you have reason to suspect a gas leak, keep out of basements and other low areas. Stay out until firefighters declare them to be safe.
- Use your neighbor's phone and call a trained LP-Gas service person and the fire department. Even though you may not continue to smell gas, do not turn on the gas again. Do not re-enter the building, vehicle, trailer, or area.
- **Finally,** let the service man and firefighters check for escaped gas. Have them air out the area before you return. Properly trained LP-Gas service people should repair the leak, then check and relight the gas fireplace for you.

NO ODOR DETECTED - ODOR FADE

Some people cannot smell well. Some people cannot smell the odor of the chemical put into the gas. You must find out if you can smell the odorant in propane. Smoking can decrease your ability to smell. Being around an odor for a time can affect your sensitivity or ability to detect that odor. Sometimes other odors in the area mask the gas odor. People may not smell the gas odor or their minds are on something else. Thinking about smelling a gas odor can make it easier to smell.

The odorant in LP-Gas is colorless, and it can fade under some circumstances. For example, if there is an underground leak, the movement of the gas through soil can filter the odorant. Odorants in LP-Gas also are subject to oxidation. This fading can occur if there is rust inside the storage tank or in iron gas pipes.

The odorant in escaped gas can adsorb or absorb onto or into walls, masonry and other materials and fabrics in a room. That will take some of the odorant out of the gas, reducing its odor intensity.

LP-Gas may stratify in a closed area, and the odor intensity could vary at different levels. Since it is heavier than air, there may be more odor at lower levels. Always be sensitive to the slightest gas odor. If you detect any odor, treat it as a serious leak. Immediately go into action as instructed earlier.

SOME POINTS TO REMEMBER

- **Learn to recognize the odor of LP-Gas.** Your local LP-Gas Dealer can give you a "Scratch and Sniff" pamphlet. Use it to find out what the propane odor smells like. If you suspect that your LP-Gas has a weak or abnormal odor, call your LP-Gas Dealer.
- If you are not qualified, do not light pilot lights, perform service, or make adjustments to appliances on the LP-Gas system. If you are qualified, consciously think about the odor of LP-Gas prior to and while lighting pilot lights or performing service or making adjustments.
- Sometimes a basement or a closed-up house has a musty smell that can cover up the LP-Gas odor. Do not try to light pilot lights, perform service, or make adjustments in an area where the conditions are such that you may not detect the odor if there has been a leak of LP-Gas.
- Odor fade, due to oxidation by rust or adsorption on walls of new cylinders and tanks, is possible. Therefore, people should be particularly alert and careful when new tanks or cylinders are placed in service. Odor fade can occur in new tanks, or reinstalled old tanks, if they are filled and allowed to set too long before refilling. Cylinders and tanks which have been out of service for a time may develop internal rust which will cause odor fade. If such conditions are suspected to exist, a periodic sniff test of the gas is advisable. **If you have any question about the gas odor, call your LP-Gas dealer. A periodic sniff test of the LP-Gas is a good safety measure under any condition.**
- If, at any time, you do not smell the LP-Gas odorant and you think you should, assume you have a leak. Then take the same immediate action recommended above for the occasion when you do detect the odorized LP-Gas.
- If you experience a complete "gas out," (the container is under no vapor pressure), turn the tank valve off immediately. If the container valve is left on, the container may draw in some air through openings such as pilot light orifices. If this occurs, some new internal rusting could occur. If the valve is left open, then treat the container as a new tank. Always be sure your container is under vapor pressure by turning it off at the container before it goes completely empty or having it refilled before it is completely empty.

fireparts.com

REQUIREMENTS FOR MASSACHUSETTS

For all side wall horizontally vented gas fueled equipment installed in every dwelling, building or structure used in whole or in part for residential purposes, including those owned or operated by the Commonwealth and where the side wall exhaust vent termination is less than seven feet above finished grade in the area of the venting, including but not limited to decks and porches, the following requirements shall be satisfied:

1. INSTALLATION OF CARBON MONOXIDE DETECTORS. At the time of installation of the side wall horizontal vented gas fueled equipment, the installing plumber or gasfitter shall observe that a hard wired carbon monoxide detector with an alarm and battery back-up is installed on the floor level where the gas equipment is to be installed. In addition, the installing plumber or gasfitter shall observe that a battery operated or hard wired carbon monoxide detector with an alarm is installed on each additional level of the dwelling, building or structure served by the side wall horizontal vented gas fueled equipment. It shall be the responsibility of the property owner to secure the services of qualified licensed professionals for the installation of hard wired carbon monoxide detectors

   a. In the event that the side wall horizontally vented gas fueled equipment is installed in a crawl space or an attic, the hard wired carbon monoxide detector with alarm and battery back-up may be installed on the next adjacent floor level.

   b. In the event that the requirements of this subdivision can not be met at the time of completion of installation, the owner shall have a period of thirty days to comply with the above requirements; provided, however, that during said thirty day period, a battery operated carbon monoxide detector with an alarm shall be installed.

2. APPROVED CARBON MONOXIDE DETECTORS. Each carbon monoxide detector as required in accordance with the above provisions shall comply with NFPA 720 and be ANSI/UL 2034 listed and IAS certified.

3. SIGNAGE. A metal or plastic identification plate shall be permanently mounted to the exterior of the building at a minimum height of eight feet above grade directly in line with the exhaust vent termination for the horizontally vented gas fueled appliance or equipment. The sign shall read, in print size no less than 1/2 inch in size, **"GAS VENT DIRECTLY BELOW. KEEP CLEAR OF ALL OBSTRUCTIONS".**

4. INSPECTION. The state or local gas inspector of the side wall horizontally vented gas fueled equipment shall not approve the installation unless, upon inspection, the inspector observes carbon monoxide detectors and signage installed in accordance with the provisions of 248 CMR 5.08(2)(a) 1 through 4.

   (b) EXEMPTIONS: The following equipment is exempt from 248 CMR 5.08(2)(a)1 through 4:

      1. The equipment listed in Chapter 10 entitled "Equipment Not Required To Be Vented" in the most current edition of NFPA 54 as adopted by the Board; and

      2. Product Approved side wall horizontally vented gas fueled equipment installed in a room or structure separate from the dwelling, building or structure used in whole or in part for residential purposes.

   (d) MANUFACTURER REQUIREMENTS - GAS EQUIPMENT VENTING SYSTEM NOT PROVIDED. When the manufacturer of a Product Approved side wall horizontally vented gas fueled equipment does not provide the parts for venting the flue gases, but identifies "special venting systems", the following requirements shall be satisfied by the manufacturer:

      1. The referenced "special venting system" instructions shall be included with the appliance or equipment installation instructions; and

      2. The "special venting systems" shall be Product Approved by the Board, and the instructions for that system shall include a parts list and detailed installation instruction.

   (e) A copy of all installation instructions for all Product Approved side wall horizontally vented gas fueled equipment, all venting instructions, all parts lists for venting instructions, and/or all venting design instructions shall remain with the appliance or equipment at the completion of the installation.

fire-parts.com

FIREPLACE SERVICE HISTORY

Date	Dealer Name	Service Technician Name	Service Performed/Notes

fire-parts.com

FIREPLACE SERVICE HISTORY

Date	Dealer Name	Service Technician Name	Service Performed/Notes

fire-parts.com

MASTER PARTS DISTRIBUTOR LIST

To Order Parts Under Warranty, please contact your local Empire dealer. See the dealer locator at www.empirecomfort.com. To provide warranty service, your dealer will need your name and address, purchase date and serial number, and the nature of the problem with the unit.

To Order Parts After the Warranty Period, please contact your dealer or one of the Master Parts Distributors listed below. This list changes from time to time. For the current list, please click on the Master Parts button at www.empirecomfort.com. Please note: Master Parts Distributors are independent businesses that stock the most commonly ordered Original Equipment repair parts for Heaters, Grills, and Fireplaces manufactured by Empire Comfort Systems Inc.

Dey Distributing
1401 Willow Lake Boulevard
Vadnais Heights, MN 55101

Phone: 651-490-9191
Toll Free: 800-397-1339
Website: www.deydistributing.com
Parts: Heater, Hearth and Grills

Victor Division of F. W. Webb Company
200 Locust Street
Hartford, CT 06114

Phone: 860-722-2433
Toll Free: 800-243-9360
Fax: 860-293-0479
Toll Free Fax: 800-274-2004
Websites: www.fwwebb.com & www.victormfg.com
Parts: Heater, Hearth and Grills

East Coast Energy Products
10 East Route 36
West Long Branch, NJ 07764

Phone: 732-870-8809
Toll Free: 800-755-8809
Fax: 732-870-8811
Website: www.eastcoastenergy.com
Parts: Heater, Hearth and Grills

fire-parts.com

HOW TO ORDER REPAIR PARTS

Parts Not Under Warranty

Parts can be ordered through your Service Person, Dealer, or a Master Parts Distributor. See this page for the Master Parts Distributors list. For best results, the **service person or dealer** should order parts through the distributor. Parts can be shipped directly to the **service person/dealer**.

Warranty Parts

Warranty parts will need a proof of purchase and can be ordered by your Service Person or Dealer. Proof of purchase is **required** for warranty parts.

All parts listed in the Parts List have a Part Number. When ordering parts, first obtain the Model Number and Serial Number from the name plate on your equipment. Then determine the Part Number (**not** the Index Number) and the Description of each part from the following illustration and part list. Be sure to give all this information . . .

Fireplace Model Number _____ Part Description _____

Fireplace Serial Number _____ Part Number _____

Type of Gas (Propane or Natural) _____

Do not order bolts, screws, washers or nuts. They are standard hardware items and can be purchased at any local hardware store.

Shipments contingent upon strikes, fires and all causes beyond our control.

WARRANTY

Empire Comfort Systems Inc. warranties this hearth product to be free from defects at the time of purchase and for the periods specified below. Hearth products must be installed by a qualified technician and must be maintained and operated safely, in accordance with the instructions in the owner's manual. Empire will not warranty any Château, Boulevard, or Mantis fireplace that is not installed by the selling dealer or that dealer's direct contract agents. This warranty applies to the original purchaser only and is not transferable.
All warranty repairs must be accomplished by a qualified gas appliance technician.

Limited Lifetime Parts Warranty – Combustion Chamber, Heat Exchanger, and Factory-Installed Glass

If the combustion chamber, heat exchanger (see parts list) or factory-installed glass fails because of defective workmanship or material, Empire will repair or replace at Empire's option.

Limited Three-Year Parts Warranty – All Other Components
(Except Remote Controls, Thermostats, Accessories and Replacement Parts)

Should any part fail because of defective workmanship or material within three years from the date of purchase, Empire will repair or replace at Empire's option.

Limited One-Year Parts Warranty – Remote Controls, Thermostats, Accessories, and Parts

Should any remote control, thermostat, accessory, or other part fail because of defective workmanship within one year from the date of purchase, Empire will repair or replace at Empire's option.

Duties of the Owner

The appliance must be installed by a qualified installer and operated in accordance with the instructions furnished with the appliance.

A bill of sale, cancelled check, or payment record should be kept to verify purchase date and establish warranty period.

Ready access to the appliance for service.

fire-parts.com

What Is Not Covered

Damages that might result from the use, misuse, or improper installation of this appliance.
Travel, diagnostic costs and freight charges on warranted parts to and from the factory.
Claims that do not involve defective workmanship or materials.
Unauthorized service or parts replacements.
Removal and reinstallation cost.
Inoperable due to improper or lack of maintenance.

How To Get Service

To make a claim under this warranty, please have your receipt available and contact your installing dealer. Provide the dealer with the model number, serial number, type of gas, and purchase verification. The installing dealer is responsible for providing service and will contact the factory to initiate any warranted parts replacements. Empire will make replacement parts available at the factory. Shipping expenses are not covered.

If, after contacting your Empire dealer, service received has not been satisfactory, contact: Consumer Relations Department, Empire Comfort Systems Inc., PO Box 529, Belleville, Illinois 62222, or send an e-mail to info@empirecomfort.com with "Consumer Relations" in the subject line.

Your Rights Under State Law

This warranty gives you specific legal rights, and you may also have other rights, which vary from state to state.

fire-parts.com

Empire Comfort Systems Inc.
918 Freeburg Ave. Belleville, IL 62220

If you have a general question about our products, please e-mail us at info@empirecomfort.com.
If you have a service or repair question, please contact your dealer.

www.empirecomfort.com